Supermarkets as an example of a winning smart grid appliance

2015-06-17

Torben Funder-Kristensen




Content

THE SUPERMARKET
as smart appliance

FLEXIBILITY
in supermarkets

AGGREGATED
Potentials

THERMAL NETWORKS
unused compressor capacity as an opportunity

CASE STUDY
on District Heating connectivity

CONCLUSION

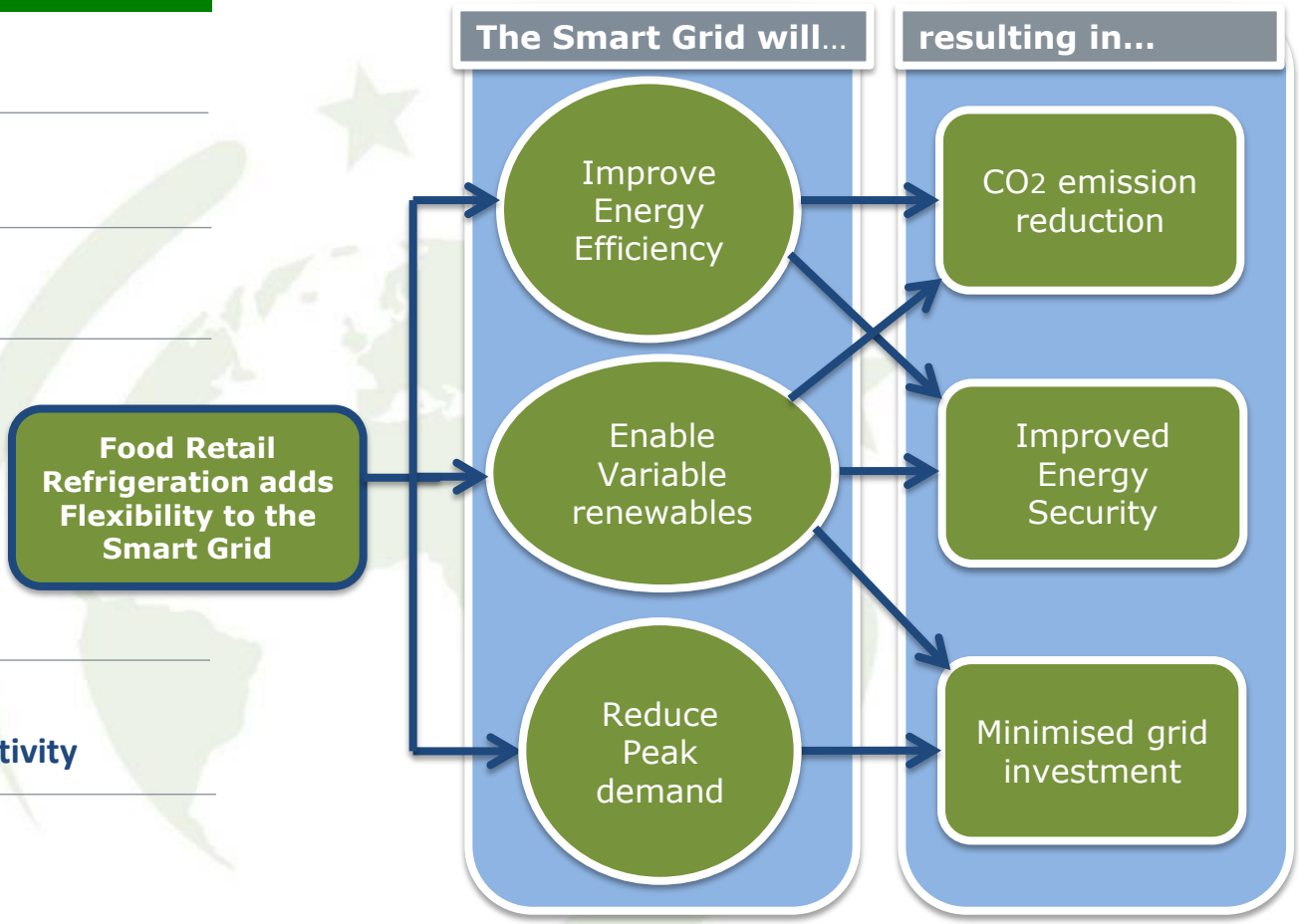

Supermarkets as smart appliance

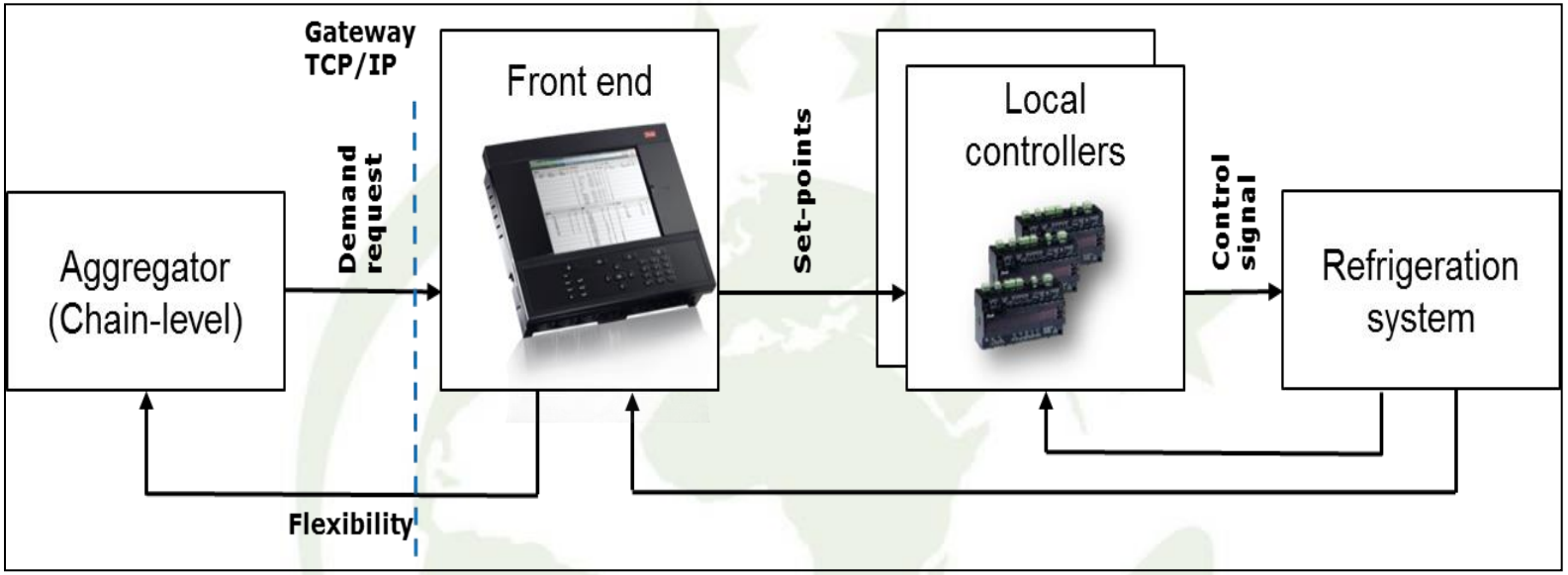

- Supermarkets use between 1-2% of all electricity in the EU
- Exploiting flexibility is doable without big investments
- The existing retail service structure is perfect to leverage on

Flexibility characteristics

Parameter	Value	Comment
Thermal storage of a typical supermarket	25 KWh	5°C temp. change in 20 cabinets of 500 kg food, C_p=1,7 KJ/(KG °C)
Compressor cooling capacity to maintain normal operation	100 KW	Full capacity is 250 KW
Compressor power with a COP of 2,5	40 KW	COP will vary during the year
Time with 100 % - 60% reduced power	15-25 min	
Time without Defrost	90 min	Defrost event is not dependent on the cooling capacity event
Defrost power flexibility	13 KW	
Total power flexibility	53 KW	For 500 stores adds up to 26,5 MW

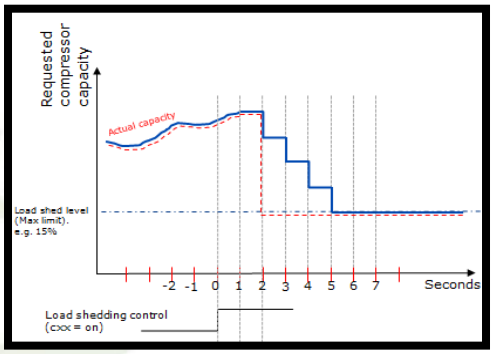

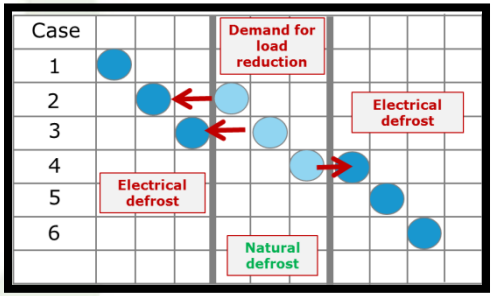

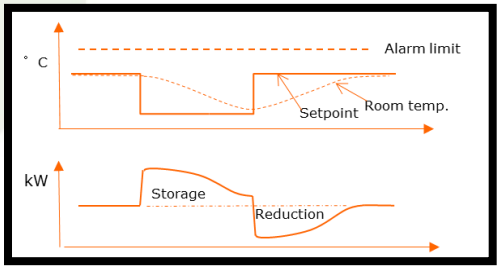

Aggregated flexibility potentials

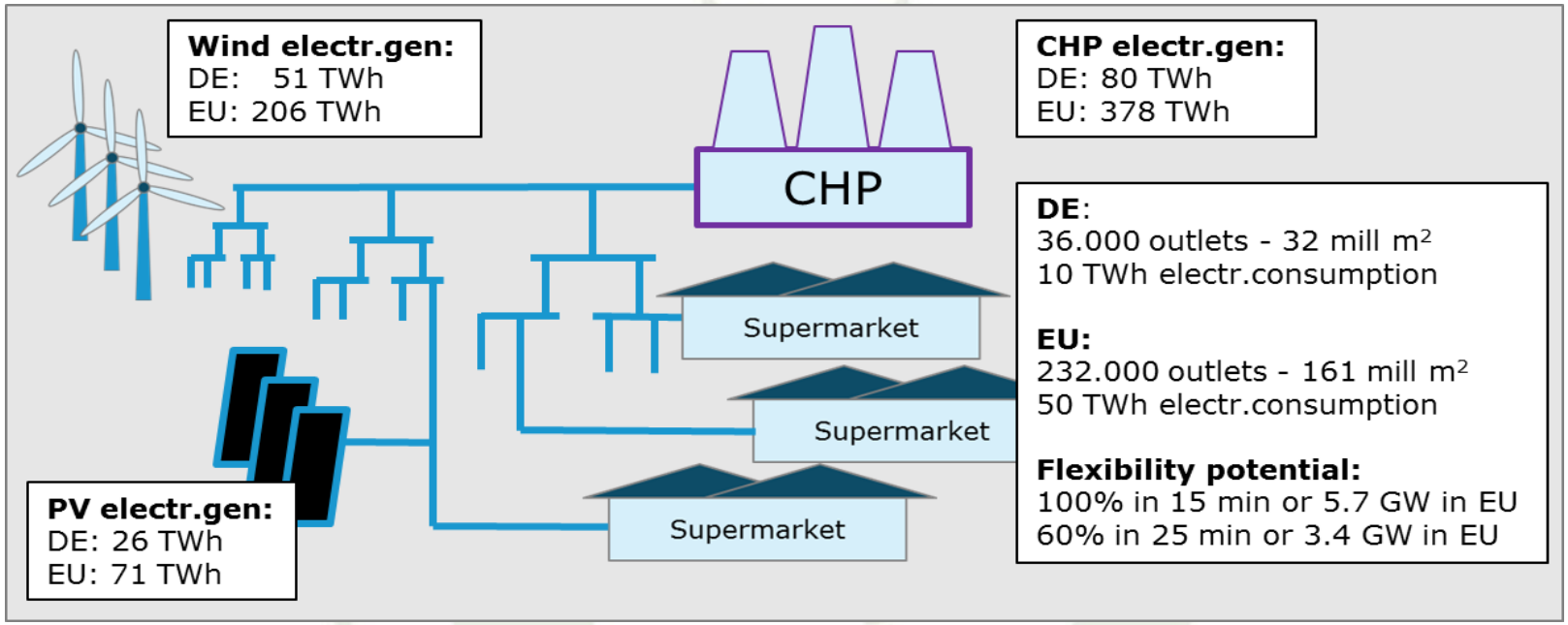

Supermarkets use up to 2% of all electricity use

Flexibility of multiple supermarkets can be aggregated

Total supermarket aggregation would account for

> 20 % of average delivered wind power *

> 30 % of average delivered PV power*

*2012 numbers

Thermal networks expand the perception of smart systems and the scope for supermarkets

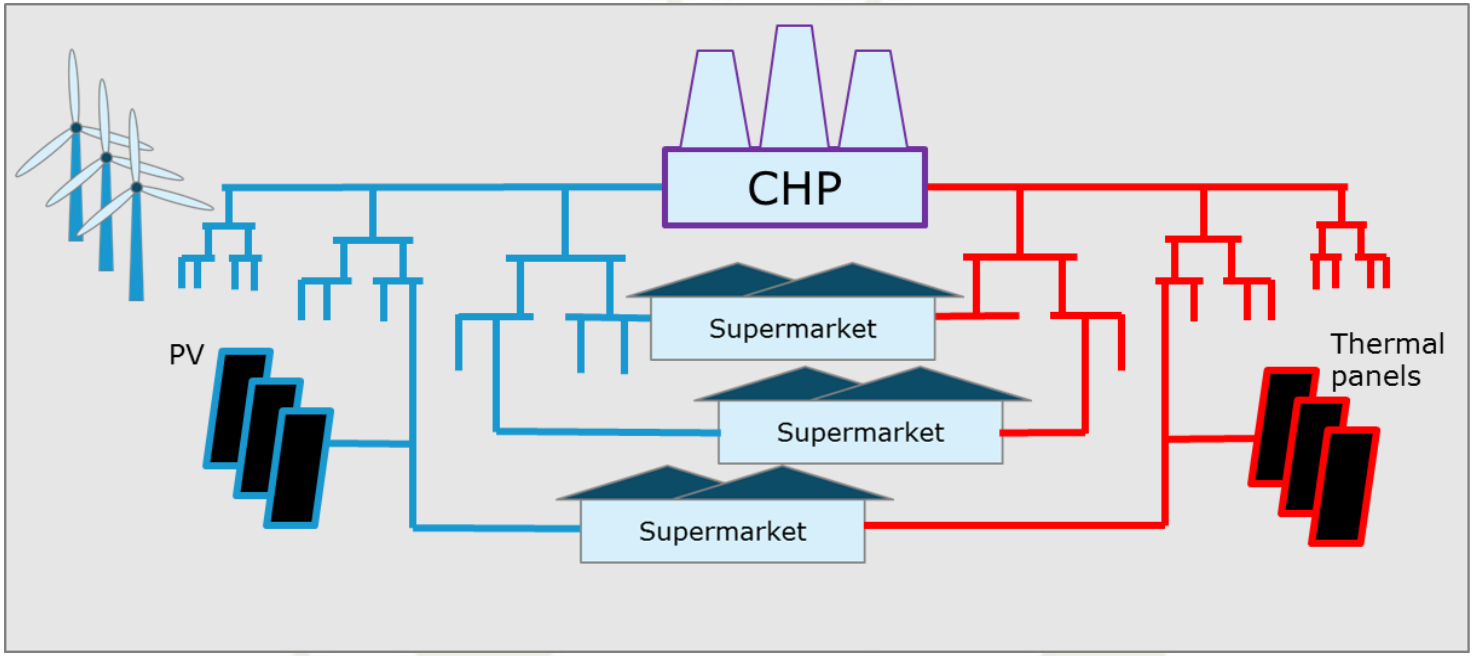

District heating and cooling networks are perfect for energy storage

Waste heat from refrigeration can be exported

Supermarkets can add flexibility and become storage enablers for heating and cooling

Unused compressor capacity is an opportunity

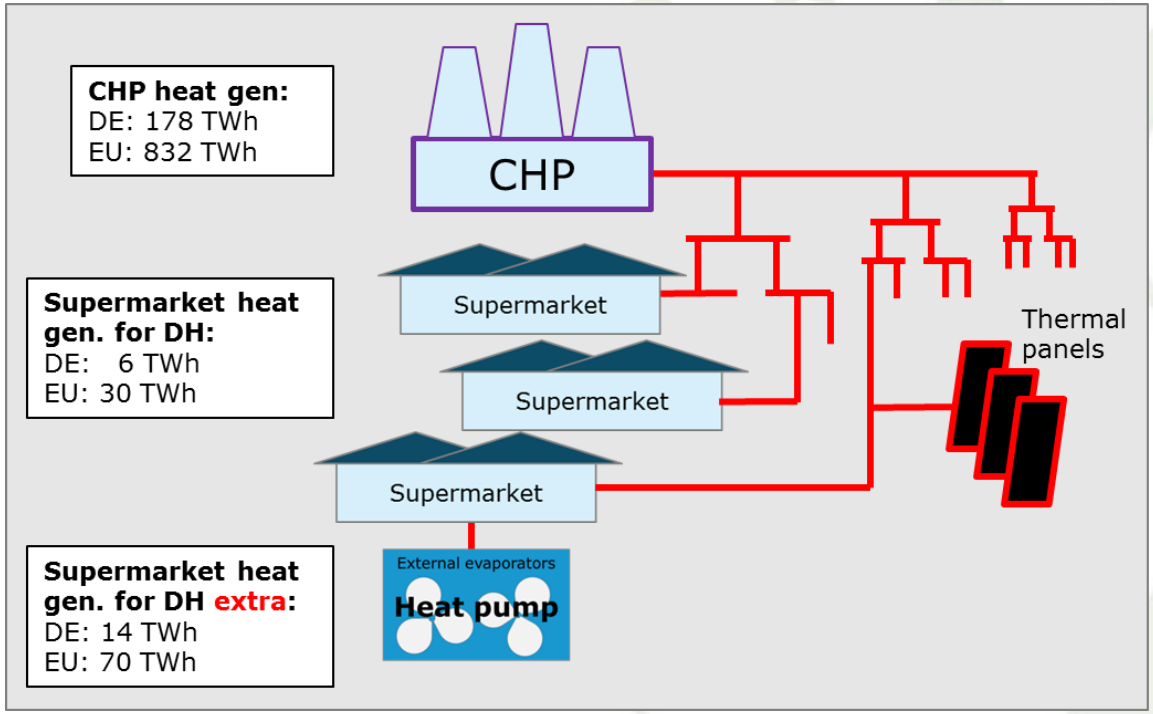

DISTRICT HEATING NETWORKS
can absorb limitless energy

TYPICALLY ONLY 30%
of the total compressor capacity is used

ASSUMING A FACTOR 2
more energy can be produced with external heat sources

Case study results

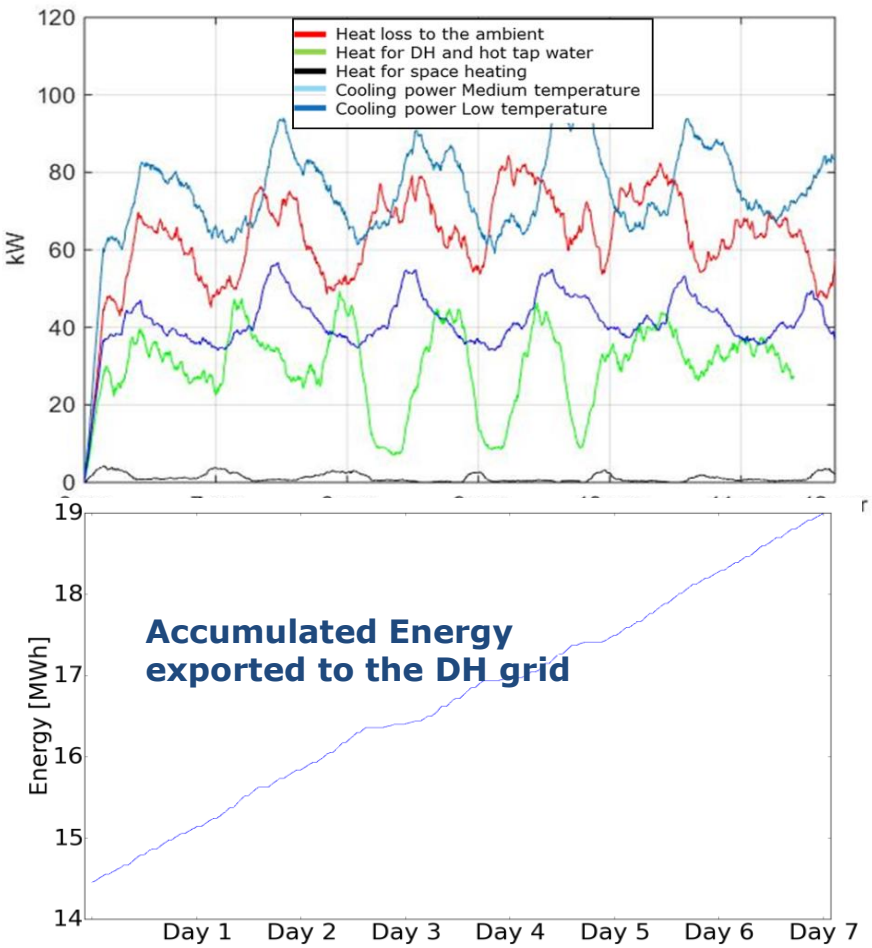

THE HEAT LOSS
is 65% of the total heat energy

THE HEAT LOSS
is expected to be 35% when space heating
cut in at low ambient temp.

AVERAGE EXPORT OF DH HEAT
is 27 kW at 65 ˚C . (This can be regarded as an average for the year)

YEARLY DH INCOME
to the supermarket is estimated to be 6000€ (24€ per MWh)

Conclusion

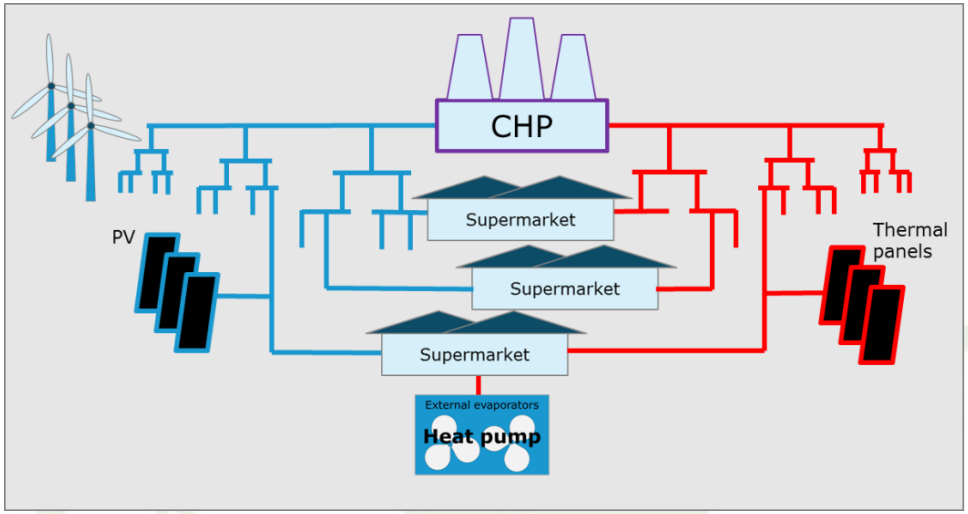

Supermarkets…

- can play a significant role in smart and integrated energy systems
- are addressable flexibility resources
- require modest investments before they make up a good business case

Heat recovery…

is taken to the next level by connecting DH grids to the supermarket refrigeration system

Extended heat production

can be utilised once connected to the DH grids

Thermal and Electrical Flexibility can enforce each other providing a multiplier factor for the business case