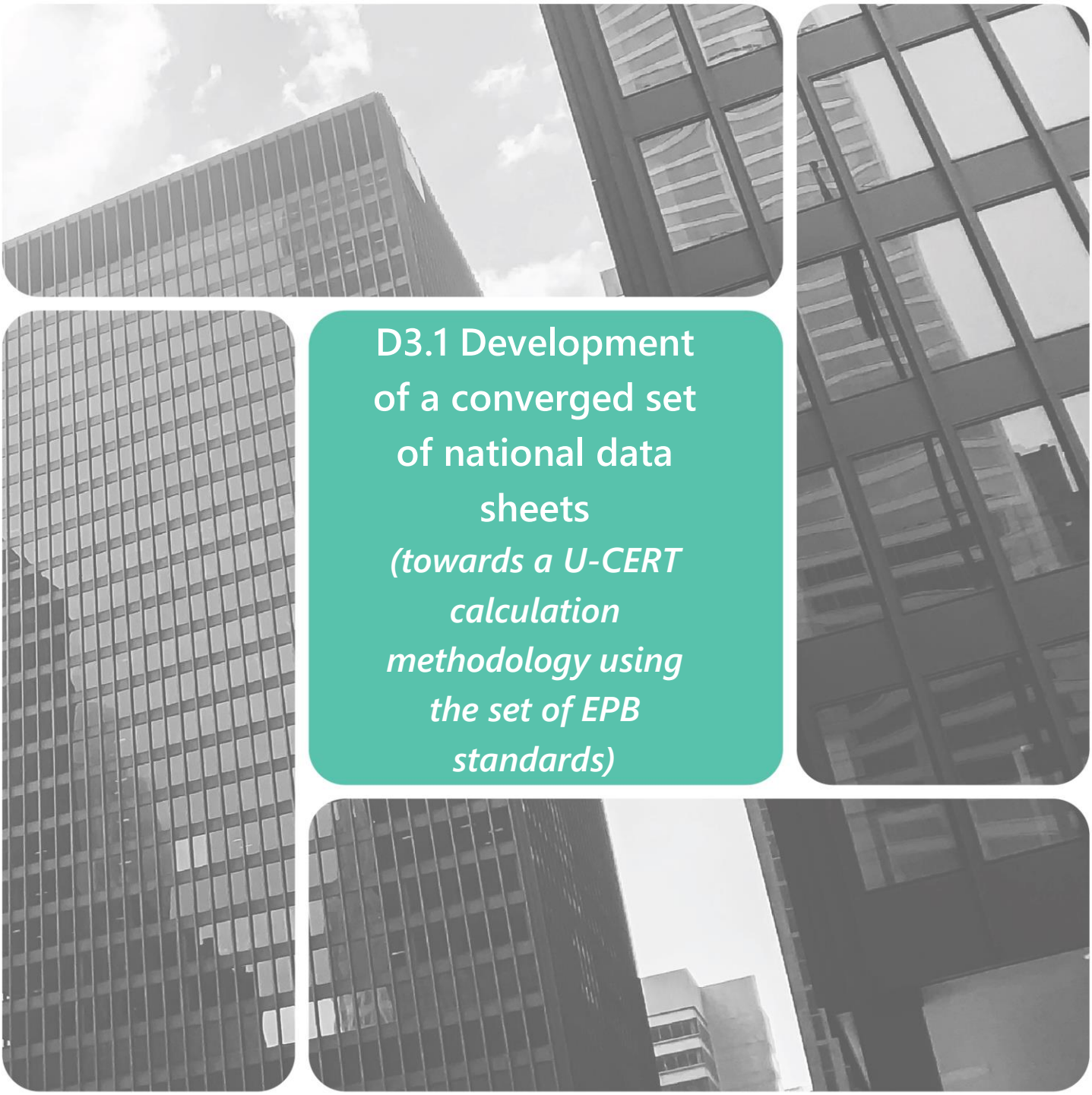

D3.1 Development of a converged set of national data sheets

(towards a U-CERT calculation methodology using the set of EPB standards)

U-CERT
User-Centred Energy Performance Assessment and Certification

This project has received funding from the European Union's Horizon 2020 research and innovation programme under the grant agreement number 839937. The European Union is not liable for any use that may be made of the information contained in this document, which is merely representing the authors' view.

U-CERT
User-Centred Energy Performance Assessment and Certification

Table of Contents

Project duration: 1st of September 2019 – 31st of August 2022

Grant Agreement number: 839937 (Coordination and Support Action)

WP: 3 Deliverable: 3.1

Lead beneficiary: EPB Center

Submission Date: 21st of December 2020

Dissemination Level: Confidential

Due date: M15

U-CERT Website: www.u-certproject.eu

Revision History:

DATE	VERSION	AUTHOR/ CONTRIBUTOR	REVISION BY	COMMENTS
29/10/2020	0.1	Dick van Dijk		First incomplete version
21/12/2020	0.9	Dick van Dijk	Ad hoc Task Force	Draft deliverable
25/01/2021	0.99	Dick van Dijk	All participants ***Peer reviewers: Marco Hofman (ISSO), Pablo Carnero (IVE), Marleen Spiekman (TNO)***	Final draft Distributed for review
03/03/2021	1.00	Dick van Dijk		Final version

Acknowledgements:

U-CERT Consortium would like to acknowledge the financial support of the European Commission under the H2020 programme. This project has received funding from the European Union's Horizon 2020 research and innovation programme under grant agreement number 839937.

1 Executive summary

Deliverable 3.1 is the result of the activities carried out within U-CERT Task 3.1, *Development of a converged set of national data sheets for the set of EPB standards*, one out of 4 tasks under Work Package 3, *Supporting development of National Implementations*. The Task leader is EPB Center, and other U_CERT partners involved are REHVA, ISSO, IVE and TNO, with input from the Case studies holders.

To provide flexibility in the application of the set of EPB standards, clearly identified choices are offered in each EPB standard, to account for (national or regional) differences in climate, culture and building tradition, building typologies, policy and legal frameworks. The choices are to be specified in a National Annex to each EPB standard or in a separate document, a so-called National Datasheet, but in both cases: following a template given in the "Annex A" of each EPB standard.

Task 3.1 aimed to come to a converged set of National Datasheets that is harmonized where possible and flexible where needed (e.g. climatic data) and widely acceptable and applicable. Additional requirements are that the converged National Datasheets are mutually and overall consistent and enable the assessment of innovative products/solutions as much as can be foreseen.

The U-CERT EPB calculation methodology will consist of the combination of the EPB standards and this converged set of U-CERT National Datasheets.

The development and use of a set of National Datasheets for the implementation of the set of EPB standards is a national responsibility of the Member States. Each MS has its own program and timeline to realize this. The U-CERT objective is that the U-CERT EPB calculation methodology will assist the eleven involved Member States in the process of drafting the national implementation of the set of EPB standards. More in general, the U-CERT converged set of National Datasheets may significantly support further harmonization of the set of EPB standards.

The results of the task are vital as input for the work under WP 4, *Assessment of the applicability of the developed assessment and the certification schemes*.

The intended starting point for the work was a collection of National Annexes or National Datasheets from the EU Member States (from Task 2.1, *Analysis of current implementation of EPC schemes in U-CERT partner countries*). However, the implementation of the set of EPB standards in the EU Member States has been delayed compared to the expectations. Likely causes for these delays are e.g. the time needed for each country for the process to change the national assessment procedures and difficulties due to the COVID-19 crisis.

This led to a change of plan to achieve the Task 3.1 results, at the cost of a 3 months later delivery.

According to the new plan the expert knowledge of the EPB Center was used to prepare a 'fully' worked out proposal for the U-CERT converged set of National Datasheets for the most relevant EPB standards, including explanation and points of attention. Thereafter, this proposal was distributed to the U-CERT partners for comment.

Next, the proposal and the comments were discussed in an ad hoc task force including the U-CERT coordinator and the leaders of WP2, WP3 and WP4.

As a final step, the underlying report was finalized and a set of supplementary working documents was prepared. The supplementary working documents intend to support the work of WP4: to test and demonstrate the methodology through the practical implementation of the procedures by the national test cases. These documents cover (as separate documents or combined in later stage when relevant):

- The proposal for the U-CERT converged set of National Datasheets for the most relevant EPB standards (see chapter 6), including explanation, points of attention and remaining questions.
- Categorization of all "Annex A" choices and explanation of (potential) interactions between the choices.
- Template for U-CERT converged set of National Datasheets for measured energy performance.
- Overview of all spreadsheets on individual EPB standards, publicly available at EPB Center or in preparation, with indication to what extent these can be used or made usable to quantify the impact of a specific "Annex A" choice (e.g. national versus U-CERT "Annex A" choice).
- Tentative indication of the input data needed for an EP calculation using the U-CERT calculation method.

A close interaction with WP4 will be maintained, aiming to use the feedback from the test cases to regularly update these supplementary documents. A close interaction with T5.4 (*Supporting tool development*) is also needed to pave the way for the T5.4 *U-CERT Comparison and calculation toolkit for national Annexes*.

2 The set of EPB standards

2.1 General

To assess the overall energy performance of a building, the European Commission has established a set of standards and accompanying technical reports to support the EPBD (mandate M/480 to CEN, *the European Committee for Standardisation*, 2012-2017). These are called the energy performance of buildings standards or "set of EPB standards". See **Figure 1**.

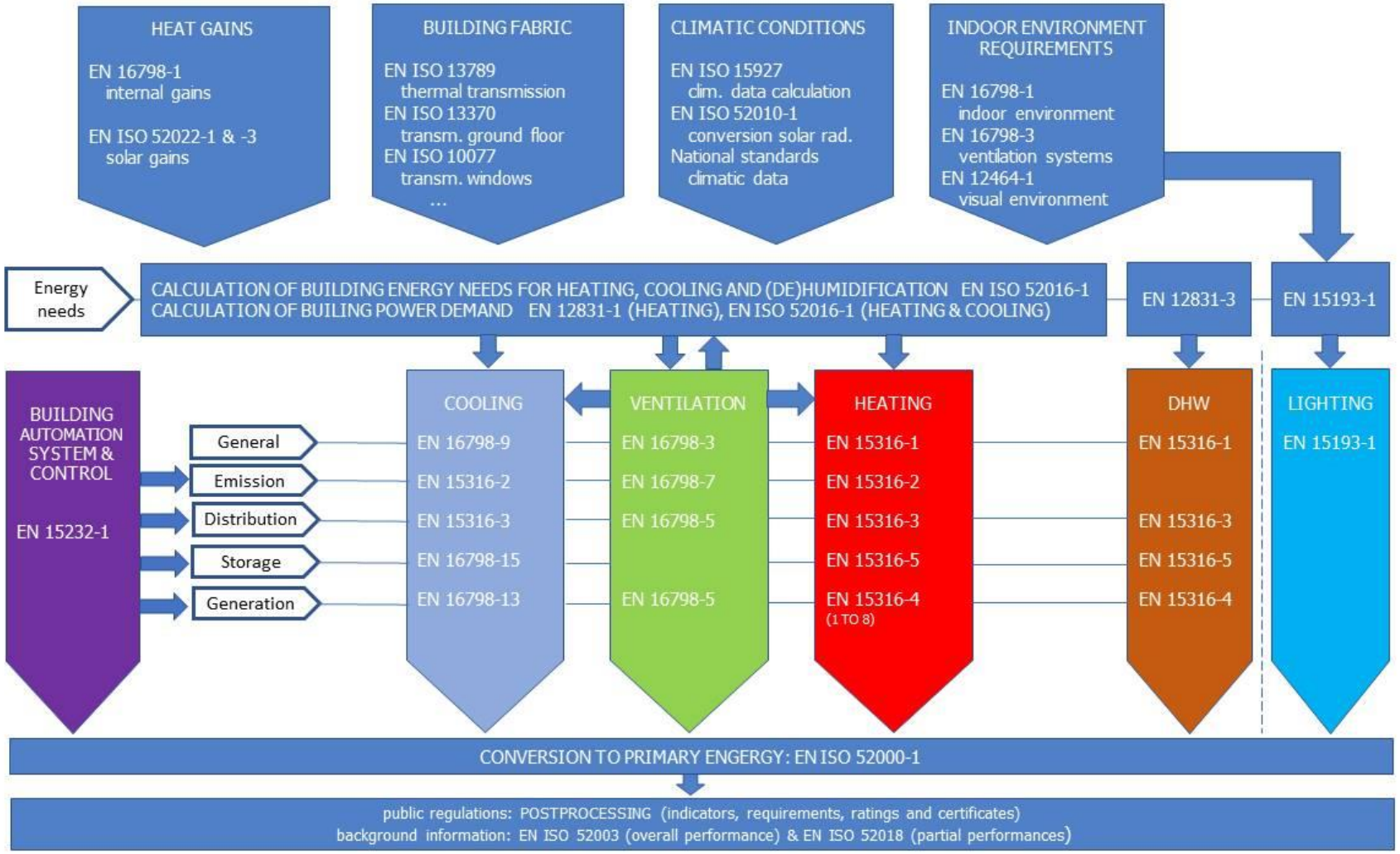

Fig.1 – Schematic overview of the set of EPB standards

All of these standards have been developed by CEN (Europe). And several of them, including the core set mentioned in the European Directive (EPBD:2018, Annex 1, see 2.2 below), have been developed in collaboration with ISO (global). Consequently, these EN ISO standards are applicable at worldwide level. Others are at this moment only available in Europe (EN standards). However, several EPB standards already published in CEN are now being developed in ISO as well.

To provide flexibility in the application each EPB standard offers clearly identified choices to account for (national or regional) differences in climate, culture and building tradition, building typologies, policy and legal frameworks. The choices are to be specified in a National Annex to each EPB standard or in a separate document, a so-called National Datasheet, but in both cases: following a template given in the "Annex A" of each EPB standard (see **Figure 2** for an example).

Table A.2 — Choice between hourly or monthly calculation method (see 5.2)

Type of object and/or application	..... b	.... b
Description	Choice a	Choice a
Only hourly method allowed	Yes/No	Yes/No
Only monthly method allowed	Yes/No	Yes/No
Both methods are allowed	Yes/No	Yes/No

a Only one Yes per column possible.

b Add more columns if needed to differentiate between type of object, type of building or space, type of application or type of assessment. Use the list of identifiers from ISO 52000-1:2017, Tables A.2 to A.7 (normative template, with informative default choices in Tables B.2 to B.7).

Fig. 2 – Example of an "Annex A" choice (from (EN) ISO 52016-1)

The development of a set of National Datasheets for the implementation of the set of EPB standards is a national responsibility of the EU Member States and each MS has its own program and timeline to realize this.

According to expectation, most EU Member States intend to develop and use a set of National Annexes or National Datasheets for the implementation of the set of EPB standards. This implies the use of the templates provided in the Annex A of each EPB standard. And, as part of a step by step implementation of the whole set, several MS will for the time being continue using elements of their national assessment method, for specific modules where the set of EPB standards (for whatever reason) is still difficult to implement.

More information:

- https://epb.center/epb-standards/
- https://epb.center/documents/guide-national-annexes/
- https://epb.center/epb-standards/iso-and-cen-road-ahead/

2.2 EPBD and the set of EPB standards

The set of EPB standards play a key role to support the Energy Performance of Buildings Directive (EPBD) of the European Union. Member States are encouraged to consider applicable standards, in particular from the list of EPB standards.

An explicit requirement can be found in EPBD Annex 1, point 1:

> *"Member States shall describe their national calculation methodology following the national annexes of the overarching standards, namely ISO 52000-1, 52003-1, 52010-1, 52016-1, and 52018-1, developed under mandate M/480 given to the European Committee for Standardisation (CEN). This provision shall not constitute a legal codification of those standards."*

Although the EPBD does not force the Member States to apply the set of EPB standards , the obligation to describe the national calculation methodology following the National Annexes of these 'overarching standards' (a better wording would have been: 'core EPB standards') will push the Member States to explain where and why they deviate from these standards. This will lead to an increased recognition and promotion of the set of EPB standards across the Member States and will have a positive impact on the implementation of the Directive.

More information:

- https://epb.center/epb-standards/energy-performance-buildings-directive-epbd/

3 Objectives

The objective of WP3 (*Supporting development of National Implementations***)** is that U-CERT will use and strengthen the services of the EPB Center to assist the eleven involved EU Member States in the process of drafting the national implementation of the Energy Performance Assessment and Certification, including application of the set of (CEN and ISO) EPB standards, developed under the mandate M/480 of the European Commission (2012-2017) and the integration of the Smart Readiness Indicator with a holistic end user centric approach.

The objective of Task 3.1 is to facilitate the implementation of the set of EPB standards by preparing a converged set of National Datasheets that is harmonized where possible and flexible where needed (e.g. climatic data) and widely acceptable and applicable. Each EPB standard describes a specific element in the calculation of the energy performance, so it is crucial that the converged set of National Datasheets are mutually and overall consistent. An additional requirement is that the converged National Datasheets enable the assessment of innovative products/solutions as much as can be foreseen.

The development and use of a set of National Datasheets for the implementation of the set of EPB standards is a national responsibility of the Member States and each MS has its own program and timeline to realize this; U-CERT will not interfere with this. However, the objective is that the U-CERT EPB calculation methodology will assist the eleven involved Member States in the process of drafting the national implementation of the set of EPB standards, offering a holistic end user centric approach.

More in general, the U-CERT converged set of National Datasheets, including the in-depth analysis of the type, background and impact of each of the choices offered in the "Annexes A", might be a strong stimulus for further harmonization of the set of EPB standards.

4 Task organization

4.1 Participants and work plan

The Task 3.1 leader is EPB Center.

Other U-CERT partners involved in this task are REHVA, ISSO, IVE and TNO, with input from the Case studies holders.

4.2 Work plan

The work under Task 3.1 was organized as follows:

- Detailed explanation of the background, set up and goal of the EPB standards and the National Annexes / National Datasheets for those U-CERT partners who are less familiar or less experienced with the concept.
- Support to the 11 involved EU Member States in the process of drafting the national implementation of the set of EPB standards, e.g. by presentations and working sessions at U-CERT meetings and by information added to the EPB Center website (pages, Q&As, presentations, tools), enriching the work done under the EPB Center's Service Contract for DG ENER.
- Categorization of the EPB standards to facilitate the identification of the most relevant ones.
- Collection of national "Annex A" choices (National Annexes or National Datasheets) from the 11 participating countries. In this task the findings of Task 2.1, *Analysis of current implementation of EPC schemes in U-CERT partner countries* are used, together with findings from other EU projects.
- Categorization of the "Annex A" choices to enable prioritization and to structure the discussion.
- Use the collected national "Annex A" choices to prepare a converged set of U-CERT National Datasheets that fulfils the requirements presented in the Objectives: The U-CERT EPB calculation methodology will consist of the combination of the EPB standards and this converged set of U-CERT National Datasheets.

The results of the task are vital as input for the work under WP 4, *Assessment of the applicability of the developed assessment and the certification schemes*.

Also Task 5.4 *U-CERT Comparison and calculation toolkit for national Annexes* depends on the combined results of Task 3.1 and WP 4.

Consequently, close contact is needed between the teams leading WP2, WP3 and WP4, also to organize the input and feedback from all case study holders.

The general fitting of WP3 within the Work Packages (WP) of the U-CERT project is shown in **Figure 3.**

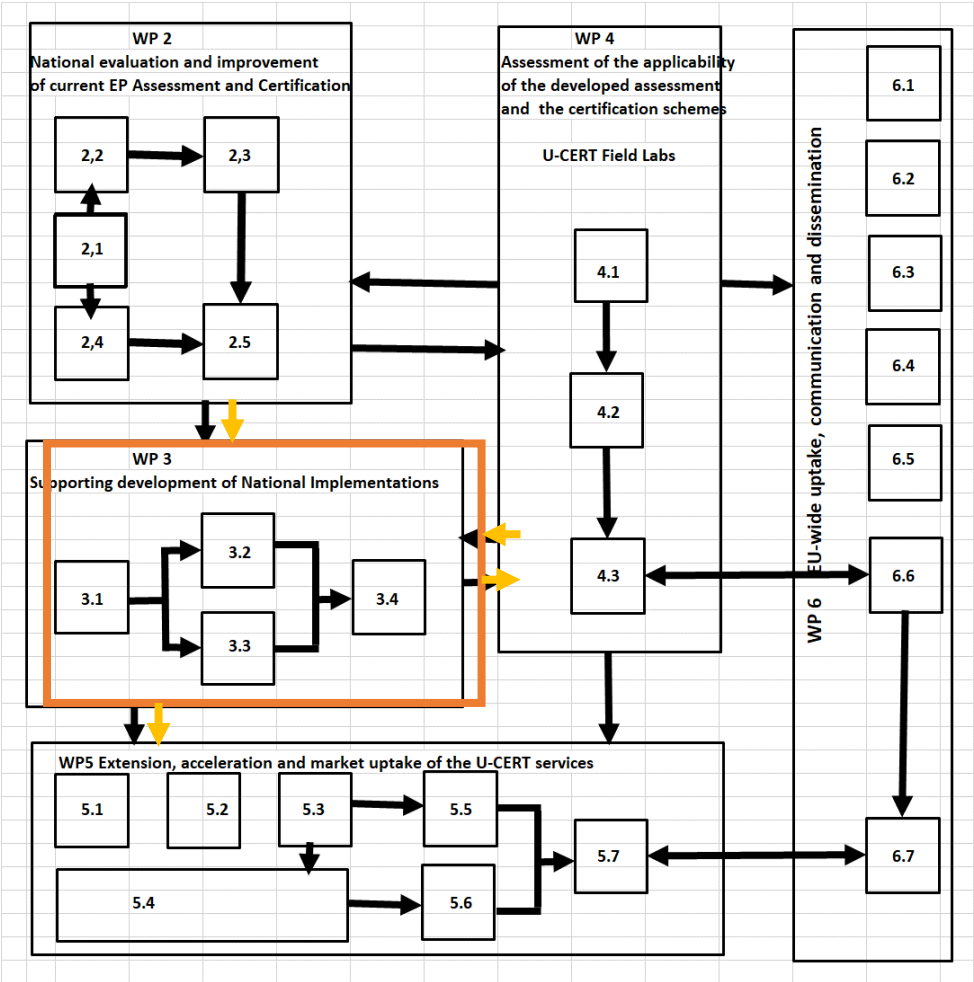

Fig. 3 - Synergies between Work Packages within U-CERT. Source: U-CERT's Grant Agreement

The work of Task 3.1 was scheduled to start in month 1 of the U-CERT project and finish in month 12 with the deliverable D3.1: *Proposed converged set of National Datasheets for the set of EPB standards*.

4.3 Adjustment of the work plan

The intended starting point for the preparation of a converged set of U-CERT National Datasheets was the collection of National Annexes or National Datasheets from the EU Member States (from Task 2.1, *Analysis of current implementation of EPC schemes in U-CERT partner countries* and findings from other EU projects).

However, the implementation of the set of EPB standards in the EU Member States has been delayed compared to the expectations. Also, the reporting of the national EPB assessment procedures in terms of the National Annexes of the five core EPB standards, according to Annex 1 of the EPBD has been delayed (deadline was March 10, 2020).

Likely causes for these delays are:

- Time (couple of years) needed for each country for the process to change the national assessment procedures.
- Difficulties during the COVID-19 crisis to have national meetings.
- EPBD Concerted Action meetings postponed due to COVID-19.
- DG ENER contacts currently fully occupied with the Green Deal and Renovation Wave.

Moreover, if available, several national authorities keep their reporting to the Commission according to Annex 1 of the EPBD (the *reporting of the national EPB assessment procedures in terms of the National Annexes of the five core EPB standards*) confidential.

Nevertheless, the EPB Center tried hard to get more information. Also WP2 has been pushing for having more inputs from partners via the U-CERT structured questionnaire.

Despite these efforts the EPB Center did not receive enough useful material as basis for the execution of Task 3.1 and the expectation was that not much more input would become available at short notice. . The only Annex A choices obtained were for Spain.

Due to this lack of available useful material and prospects of useful material at short notice, a revision of the work plan was discussed and agreed with the project coordinator and WP 4 leader.

The new plan included:

- The EPB Center and partners own expert knowledge will be used to prepare a coherent set of National Datasheets, at least for the five overarching and specific system standards.
- The change of plan will lead to a delay in reporting of no more than 3 months.
- A regular tasks force will be set up by the EPB Center to facilitate the convergence of cross tasks activities between WP3 and WP4, in tandem with IVE (WP 4), ISSO (Task 5,4) and REHVA (WP2)

5 Activities

5.1 Information

The EPB Center experts who are active in U-CERT have used the discussions with and questions from the U-CERT participants at the WP 3 working sessions of the U-CERT Consortium Meetings and in between the meetings to shape and enrich the EPB Center information and communication tools that were being prepared in the context of the EPB Center's Service Contract with DG ENER. For example:

- The Guide how to fill in National Annexes or National Datasheets (available at EPB Center, Nov. 4, 2019).
- The webinar providing an overview of the set of EPB standards (EPB standards overview: why, how, what!, March 19, 2020)
- The webinar explaining the importance and feasibility of the hourly calculation methodology, to enable the assessment of innovative products/solutions (EPB standards hourly vs monthly methods, May 26, 2020)
- Additions to the FAQs on the EPB standards and national "Annex A" choices (https://epb.center/support/overview-epb-standards/epb/#faq-4379)

5.2 Towards a converged set of U-CERT National Datasheets

According to the new plan the expert knowledge of the EPB Center was used to prepare a proposal for the U-CERT converged set of National Datasheets for the most relevant EPB standards. The U-CERT EPB calculation methodology consists of the combination of the EPB standards and this converged set of U-CERT National Datasheets.

A first version of the proposal was distributed in the second half of November 2020 for comment to the U-CERT partners. Because the filling in of the "Annex A" choices needs to be done in a CEN and ISO compatible format, this document was prepared as a separate document (→ **Suppl 1**; see below) and not included in or annexed to the underlying D3.1 report. Another reason for keeping it separate is the need for continuous updating during the project, based on feedback from the other work packages and the case study holders.

The proposal and the comments were then discussed (late November 2020) in the ad hoc task force including the U-CERT coordinator and the leaders of WP2, WP3 and WP4.

All "Annex A" choices for the selected EPB standards together consist of a high number of tables (see 8.2). Many valuable comments were made by the U-CERT partners on the proposed choices. From these comments it could be concluded that there were no serious problems foreseen to come to the intended convergence.

Nevertheless, further investigation is needed to come to the final overall consistent and effective choices, also taking into account the needs that were expressed in the U-CERT ethnographic investigations.

The categorization of all "Annex A" choices and explanation of (potential) interactions between the choices is an important aid in this process (→ **Suppl 2**).

Although WP 3.1 is focused on the EPB calculation methodology, the ad hoc task force requested to prepare a similar supplementary document to fill in the "Annex A" choices for the EPB standards dealing with measured energy performance (→ **Suppl 3**).

The relevance of certain "Annex A" choices will also depend on the outcome of discussions by the ad hoc task force on which tool (to be developed in Task 5.4, *U-CERT Comparison and calculation toolkit for national Annexes*) is needed and feasible to enable the comparison between national methodology and U-CERT methodology. Since a full-scale U-CERT EPB calculation tool is not feasible, alternative options need to be explored and discussed. For instance:

1. If we aim at a U-CERT tool that will enable each case study holder to calculate the EP with the U-CERT methodology, then no link in the chain can be left undecided. This implies that all "Annex A" tables of all EPB standards dealing with calculation need to be either filled in or bypassed (e.g. by tabulated default values). But more importantly, developing a full-blown calculation tool, covering all EPB standards in full detail, with all possible national choices, would be a multi-year project in itself. So a simplified tool would be the only achievable goal. But the simplifications may hinder the comparison of the overall EP. Leaving only the comparison of intermediate results as an option.
2. Given the limitations of option 1, an alternative is to aim at a U-CERT tool that will enable each case study holder to see the impact of a specific national "Annex A" choice versus the U-CERT "Annex A" choice on specific partial outputs of the EPB methodology. With this alternative approach the analysis can be done step by step, e.g. setting apart the analysis of specific "Annex A" choices for more prolonged discussion, zooming in on special hot issues, etc.. This assumes that the pilot case holders have access to the national methodology. Complicated parts of the methodology, especially if the national methodology has little similarity with the corresponding EPB standards, will not lend themselves for a comparison in this way: the devil is in the details. Consequently, the comparison should preferably focus on specific aspects that can be made explicit, also in the national methodologies.

In any case, to make the U-CERT EPB methodology operational, the case study holders need to know, from Task 3.1, which input data they have to gather to perform the comparisons.

To explore the practical possibilities and limitations of option 2 a fourth supplementary document (**Suppl 4**) has been set up that list all "Annex A" choices of all selected EPB standards and shows whether the available spreadsheets on the individual EPB standards that publicly available at EPB Center or in preparation could be used or made usable to quantify the impact of a specific "Annex A" choice; ergo: comparison of national versus U-CERT "Annex A" choices.

To explore the practical possibilities and limitations of option 1 a fifth supplementary document (**Suppl 5**) has been created to list all selected EPB standards and to show which input data are needed for an overall EP calculation using the set of EPB standards. Because most EPB standards cover a wide variety of possible technologies and combinations of technologies, some more conventional, others more innovative or exotic, this is less straightforward as one might expect at first instance. Note that the choices made in the U-CERT National Datasheets may also have an effect on which input data are needed.

6 Selection of EPB calculation standards

6.1 Introduction

The set of EPB standards consists of about 50 documents, each covering a specific aspect.

However, not all EPB standards contain (EP) calculation procedures, because the set of EPB standards also comprise e.g. inspection procedures, building, system or component design, (EP) measurement procedures, standards on EP indicators, requirements or ratings and e.g. reference calculation procedures (as basis for practical calculation procedures provided in other EPB standards).

Moreover, not all EPB standards that describe calculation procedures are equally relevant for the practitioner, as will be explained in 6.2.

See for more detailed information the following links:

- At EPB Center website:
  - General background information: https://epb.center/epb-standards/
  - List of all EPB standards: https://epb.center/documents/?title=&group=2
  - Webinar 2 presentation by Dick van Dijk (introduction to the different categories of EPB standards).
    recording of this presentation
    combined pdf of all webinar 2 presentations
- CEN-CE, CEN standard certified experts *(EU-wide training / qualification scheme based on EPBD mandated CEN standards)*
  - https://www.cen-ce.eu/

Consequently, the first step towards a coherent U-CERT EPB calculation methodology concerns the **categorization** and **hierarchy** of EPB standards, from the perspective of the **application in practice**.

6.2 Categorization of EPB standards

The set of EPB standards is divided into **modules**.

NOTE At the EPB Center website the modules are presented as "**Topics**".

Furthermore, a number of **themes** are distinguished.

See the subdivision of modules and themes in **Table 1**.

The green colored categories are within the selection for the calculation method, the red ones are not.

Table 1 – The EPB modules and themes

Modules	Themes
1. Overarching 2. Building as such 3. Heating systems 4. Cooling systems 5. Ventilation systems 6. Domestic hot water systems 7. Humidification 8. Dehumidification 9. Lighting 10. Building automation and control 11. PV, wind power	○ (EP) Calculation procedures ○ EP pre- processing (indoor and outdoor conditions) ○ EP post-processing (EP indicators, requirements or ratings) ○ (EP) Measurement procedures ○ Building, system or component design procedures ○ Inspection procedures ○ Certification procedures ○ Other

NOTE It may be that a standard covers more than one theme. For the purpose of this report the key question is whether the standard contains EP calculation procedures and/or EP pre- or post-processing procedures or not.

NOTE At the EPB Center website the distinction between Themes is also used, but less refined. In the set of EPB standards, each module is subdivided. Each subdivision relates to a specific theme or technical aspect.

6.3 Selection

6.3.1 Overview of all EPB standards

Annex 1 of this report provides the complete overview of all EPB standards, listed per module, with the Theme presented in a separate column. The total number of EPB standards in this overview is 61.

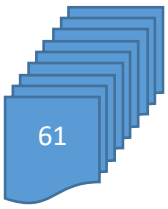

6.3.2 Selection step 1: ignore duplicates

If we ignore the **duplicates** in the published EPB standards (2x CEN and ISO different standards on the same topic), and the duplicates in the EPB standards in **preparation** (6 x EN standards being prepared as EN ISO standards), the number of selected EPB standards is reduced from 61 to 53.

NOTE When there are duplicate CEN and ISO versions, the CEN version is listed (with the ISO number added between brackets).

6.3.3 Selection step 2: focus on EP calculations

For the U-CERT calculation procedures, we are not interested in the EPB standards that contain building, system or component design procedures, inspection or certification procedures and "other" EPB standards that do not contain **EP Calculation or Pre- and Post-processing procedures**. This reduces the number of standards further, from 53 to 37. These 37 EPB standards are listed in **Table 4** further on.

6.3.4 Selection step 3: filter on user type

The selection is further refined by adding another subdivision of the EPB calculation standards: what are the typical users of the set. See **Table 2**. The green colored categories will be adopted within the selection, the red ones will not.

Table 2 – Subdivision of typical user and position in the hierarchy

The typical user [a)] of the EPB standard
• Regulator • **EPB assessor** • **System engineer** [b)] • Product/component manufacturer or supplier • (EP) standard writers (incl. reference procedures)
a): The actual user of the standard (incl. National Annex or Datasheet) in practice b): This remains of course arbitrary, because it depends on: (1) the complexity of the system, and (2) whether a detailed or simplified calculation procedure is selected/allowed (e.g. selected as part of the choices in Annex A of that standard)

NOTE The average EPB assessors will probably not use the EPB standard itself (also not the national method). They will use only the software. But the main issue here is they are interested in choosing the input data and how these impact the output. So they are interested in the *U*-value of a window, but have less direct interest in the material data that is used as input for the standard to calculate this *U*-value.

In **Table 4** each EPB standard is subdivided according to the typical user.

Regulators and (EP) standard writers are not *actual users in practice* of the EPB standards containing calculation or pre- or postprocessing pocedures. Therefore they are disregarded in Table 4.

If we count all the EPB standards in **Table 4** that have as typical user categories the EPB assessor or the system engineer, then the selection is reduced from 37 to 25.

Warning:

- As footnote b) in **Table 2** explains, the subdivision remains arbitrary, for instance because a system engineer may not be needed in case of an **uncomplicated system or** in case a **simplified calculation procedure** is selected/allowed (e.g. selected/allowed as part of the choices in Annex A of that standard) to waive specific complexities.

6.3.5 Selection step 4: filter on position in the hierarchy

Finally, the selection is further refined by adding as subdivision of the EPB calculation standards: what is the position in the hierarchy of the set. See **Table 3**.

Again, the green colored categories will be adopted within the selection, the red ones will not.

Table 3 – Subdivision of position in the hierarchy

The position in the hierarchy [a)] of EPB standards
• General application • Special application (technologies, situations) [b)] • Whether General or Special: May often be simplified, without major impact on the overall EP [c)]
a): Although to some extent arbitrary b): But EPB standards that contain procedures for innovative technologies that are applied in case studies may in second instance be added….. c): But depends on the technologies

In **Table 4** each EPB standard is also subdivided according to the position in the hierarchy.

If we count all 25 already selected EPB standards in Table 4 that have a **"general application"**, then the selection is reduced from 25 to 16.

Finally, from these 16 EPB standards, the standards are in the first instance ignored that "may often be simplified without major impact on the overall EP". For instance, EPB standards that, in reasonably simple situations, allow for tabulated values instead of a detailed calculation. If we skip these EPB standards from the selection, the selection is (finally) reduced from 16 to 9.

Warning:

Again, as footnote b) in Table 3 explains, these subdivisions remain arbitrary, for instance because EPB standards containing procedures for **innovative technologies** that are applied in case studies may in second instance be needed.

6.3.6 Result

Table 4 shows all EP calculation and EP pre-/post-processing standards with the above mentioned subdivisions. The 9 green colored standards are the ones that are part of the final selection of the EPB standards for the core of the U-CERT EPB calculation methodology.

However, this final selection is not cast in stone, as explained in the previous paragraph.

Table 4 – All EPB standards containing EP Calculation or EP pre- or post-processing procedures and further subdivision with (in green) the final selection

M#	Number	Title	Typical user			Hierarchy		
			EPB assessor	System engineer	Prod.supplier	General	Special	May be simplified
M1	EN ISO 52000-1	Energy Performance of Buildings – Overarching EPB assessment – Part 1: General framework and procedures	E	-	-	G	-	
M1	EN ISO 52003-1	Energy performance of buildings – Indicators, requirements, ratings and certificates – Part 1: General aspects and application to the overall energy performance	E	-	-	G	-	
M1	EN 16798-1 (alt.: ISO 17772-1) (alt. EN ISO 52007-1 in prep.)	Energy performance of buildings – Ventilation of buildings – Part 1: Indoor environmental input parameters for design and assessment of energy performance of buildings addressing indoor air quality, thermal environment, lighting and acoustics (Module M1–6)	E	-	-	G	-	
M1	EN ISO 52010-1	Energy performance of buildings - External climatic conditions - Part 1: Conversion of climatic data for energy calculations	E	-	-	G	-	
M2	EN ISO 52016-1	Energy performance of buildings – Energy needs for heating and cooling, internal temperatures and sensible and latent heat loads - Part 1: Calculation Procedures	E	-	-	G	-	
M2	EN ISO 52016-3	Energy performance of buildings – Energy needs for heating and cooling, internal temperatures and sensible and latent heat loads - Part 3: Calculation procedures regarding adaptive building envelope elements (in preparation)	E	-	-	-	S	
M2	EN ISO 52016-5	Energy performance of buildings – Energy needs for heating and cooling, internal temperatures and sensible and latent heat loads - Part 5: Specific criteria and validation procedures (in preparation)	E	-	-	-	S	
M2	EN ISO 52018-1	Energy performance of buildings — Indicators for partial EPB requirements related to thermal energy balance and fabric features — Part 1: Overview of options	E	-	-	G	-	-
M2	EN ISO	Thermal performance of buildings -	-	-	P	G	-	-

M#	Number	Title	Typical user			Hierarchy		
			EPB assessor	System engineer	Prod.supplier	General	Special	May be simplified
	13789	Transmission and ventilation heat transfer coefficients - Calculation method						
M2	EN ISO 13370	Thermal performance of buildings – Heat transfer via the ground – Calculation methods	-	-	P	G	-	-
M2	EN ISO 6946	Building components and building elements – Thermal resistance and thermal transmittance – Calculation method	-	-	P	G	-	-
M2	EN ISO 10211	Thermal bridges in building construction - Heat flows and surface temperatures - Detailed calculations	-	-	P	-	S	-
M2	EN ISO 14683	Thermal bridges in building construction – Linear thermal transmittance – Simplified methods and default values	-	-	P	-	S	-
M2	EN ISO 10077-1	Thermal performance of windows, doors and shutters – Calculation of thermal transmittance – Part 1: General	-	-	P	G	-	-
M2	EN ISO 10077-2	Thermal performance of windows, doors and shutters – Calculation of thermal transmittance – Part 2: Numerical method for frames	-	-	P	-	S	-
M2	EN ISO 12631	Thermal performance of curtain walling – Calculation of thermal transmittance	-	-	P	-	S	-
M2	EN ISO 13786	Thermal performance of building components – Dynamic thermal characteristics – Calculation methods	-	-	P	-	S	-
M2	EN ISO 52022-3	Energy performance of buildings – Thermal, solar and daylight properties of building components and elements – Part 3: Detailed calculation method of the solar and daylight characteristics for solar protection devices combined with glazing	-	-	P	-	S	-
M2	EN ISO 52022-1	Energy performance of buildings – Thermal, solar and daylight properties of building components and elements – Part 1: Simplified calculation method of the solar and daylight characteristics for solar protection devices combined with glazing	-	-	P	-	S	-
M3	EN 15316-1	Energy performance of buildings – Method for calculation of system energy requirements and system efficiencies – Part 1: General and Energy performance expression, Module M3–1, M3–4, M3–9, M8–1, M8–4	E	-	-	G	-	M

M#	Number	Title	Typical user			Hierarchy		
			EPB assessor	System engineer	Prod.supplier	General	Special	May be simplified
M3	EN 15316-2 (alt.: ISO 52031)	Energy performance of buildings – Method for calculation of system energy requirements and system efficiencies – Part 2: Space emission systems (heating and cooling), Module M3–5, M4–5	E	-	-	G	-	M
M3	EN 15316-3 (alt.: EN ISO 52032 in prep.)	Energy performance of buildings – Method for calculation of system energy requirements and system efficiencies – Part 3: Space distribution systems (DHW, heating and cooling), Module M3–6, M4–6, M8–6	E	-	-	G	-	M
M3	EN 15316-5	Energy performance of buildings – Method for calculation of system energy requirements and system efficiencies – Part 5: Space heating and DHW storage systems (not cooling), Module M3–7, M8–7	-	S	-	-	S	-
M3	EN 15316-4-1	Energy performance of buildings – Method for calculation of system energy requirements and system efficiencies – Part 4–1: Space heating and DHW generation systems, combustion systems (boilers, biomass), Module M3–8-1 and M 8–8-1	E	-	-	G	-	M
M3	EN 15316-4-2	Energy performance of buildings – Method for calculation of system energy requirements and system efficiencies – Part 4–2: Space heating generation systems, heat pump systems, Module M3–8-2, M8–8-2	E	-	-	G	-	-
M3	EN 15316-4-3	Energy performance of buildings – Method for calculation of system energy requirements and system efficiencies – Part 4–3: Heat generation systems, thermal solar and photovoltaic systems, Module M3–8-3, M8–8-3, M11–8-3	-	S	-	-	S	-
M3	EN 15316-4-4	Energy performance of buildings – Method for calculation of system energy requirements and system efficiencies – Part 4–4: Heat generation systems, building-integrated cogeneration systems, Module M8–3-4, M8–8-4, M8–11-4	-	S	-	-	S	-
M3	EN 15316-4-5	Energy performance of buildings – Method for calculation of system energy requirements and system efficiencies – Part 4–5: District heating and cooling, Module M3–8-5, M4–8-5, M8–8-5, M11–8-5			-	-	S	-

M#	Number	Title	Typical user			Hierarchy		
			EPB assessor	System engineer	Prod.supplier	General	Special	May be simplified
M3	EN 15316-4-8	Energy performance of buildings – Method for calculation of system energy requirements and system efficiencies – Part 4–8: Space heating generation systems, air heating and overhead radiant heating systems, including stoves (local), Module M3–8-8	-	S	-	-	S	-
M4	EN 16798-9	Energy performance of buildings – Ventilation for buildings – Part 9: Calculation methods for energy requirements of cooling systems (Modules M4-1, M4-4, M4-9) – General	-	S	-	G	-	M
M4	EN 16798-15	Energy performance of buildings – Ventilation for buildings – Part 15: Calculation of cooling systems (Module M4–7) – Storage	-	S	-	-	S	-
M4	EN 16798-13	Energy performance of buildings – Ventilation for buildings – Part 13: Calculation of cooling systems (Module M4–8) – Generation	-	S	-	G	-	M
M5+ M6	EN 16798-7	Energy performance of buildings – Ventilation for buildings – Part 7: Calculation methods for the determination of air flow rates in buildings including infiltration (Module M5–5)	E	-	-	G	-	-
M5+ M7	EN 16798-5-1	Energy performance of buildings – Ventilation for buildings – Part 5–1: Calculation methods for energy requirements of ventilation and air conditioning systems (Modules M5–6, M5–8, M6–5, M6–8, M7–5, M7–8) – Method 1: Distribution and generation	-	S	-	G	-	-
M5	EN 16798-5-2	Energy performance of buildings – Ventilation for buildings – Part 5–2: Calculation methods for energy requirements of ventilation systems (Modules M5-6, M5-8, M6-5, M6-8, M7-5, M7-8) - Method 2: Distribution and generation	E	-	-	-	S	-
M9	EN 15193-1	Energy performance of buildings – Energy requirements for lighting – Part 1: Specifications, Module M9	E	-	-	G	-	M
M11	EN 15316–4-10	Energy performance of buildings - Method for calculation of system energy requirements and system efficiencies - Part	-	S	-	-	S	-

M#	Number	Title	Typical user			Hierarchy		
			EPB assessor	System engineer	Prod.supplier	General	Special	May be simplified
		4-10: Wind power generation systems, Module M11-8-7						

6.3.7 Final selection

So the following 9 EPB standards (**Table 5**) have been selected for the U-CERT EPB calculation methodology.

Table 5 – The final selection of 9 EPB standards for the U-CERT EPB calculation methodology

M#	Number	Title
M1	EN ISO 52000-1	Energy Performance of Buildings – Overarching EPB assessment – Part 1: General framework and procedures
M1	EN ISO 52003-1	Energy performance of buildings – Indicators, requirements, ratings and certificates – Part 1: General aspects and application to the overall energy performance
M1	EN ISO 52010-1	Energy performance of buildings - External climatic conditions - Part 1: Conversion of climatic data for energy calculations
M1	EN 16798-1 (alt.: ISO 17772-1) (alt. EN ISO 52007-1 in prep.)	Energy performance of buildings – Ventilation of buildings – Part 1: Indoor environmental input parameters for design and assessment of energy performance of buildings addressing indoor air quality, thermal environment, lighting and acoustics (Module M1–6)
M2	EN ISO 52016-1	Energy performance of buildings – Energy needs for heating and cooling, internal temperatures and sensible and latent heat loads - Part 1: Calculation Procedures
M2	EN ISO 52018-1	Energy performance of buildings — Indicators for partial EPB requirements related to thermal energy balance and fabric features — Part 1: Overview of options
M3	EN 15316-4-2	Energy performance of buildings – Method for calculation of system energy requirements and system efficiencies – Part 4–2: Space heating generation systems, heat pump systems, Module M3–8-2, M8–8-2
M5+ M6	EN 16798-7	Energy performance of buildings – Ventilation for buildings – Part 7: Calculation methods for the determination of air flow rates in buildings including infiltration (Module M5–5)
M5+ M7	EN 16798-5-1	Energy performance of buildings – Ventilation for buildings – Part 5–1: Calculation methods for energy requirements of ventilation and air conditioning systems (Modules M5–6, M5–8, M6–5, M6–8, M7–5, M7–8) – Method 1: Distribution and generation

However, this final selection is not cast in stone, as explained in the paragraphs above:

- The subdivision of typical user (**Table 2**) remains arbitrary, for instance because a system engineer may not be needed in case of an **uncomplicated system or** in case a **simplified**

calculation procedure is selected/allowed (e.g. selected/allowed as part of the choices in Annex A of that standard) to waive specific complexities.

- The subdivision of position in the hierarchy (**Table 3**: "special application" and "may be simplified") remains arbitrary, for instance because EPB standards that contain procedures for **innovative technologies** that are applied in case studies may in second instance be added.

About innovative technologies:

Innovation often takes place at the level of **system integration**.

For instance connecting a heat pump system with a PV system.

And/or some smart control systems also taking into account storage and grid delivery optimization.

Or a thermal solar system integrating the heating generation function for space and DHW heating.

Or ventilative cooling in connection with evaporative cooling potential or by using ground source coupling.

Such combinations can be handled if the relevant EPB standards are selected and if the interconnection can be handled.

7 Selection of EPB standards for measured energy performance

The discussion on U-CERT procedures for measured EP takes place in U-CERT tasks T2.4, T3.2 and T4.1).

To give an impression of similarities and differences with the selection of EPB standards for calculated energy performance, we briefly introduce the subject in this report.

There is **only one EPB standard** specifically on measured energy performance: **EN 15378-3:2017,** *Heating systems and water based cooling systems in buildings — Heating and DHW systems in buildings — Part 3: Measured energy performance*.

Moreover, this standard focuses only on heating and DHW systems.

However, most of the choices in the **overarching EPB standard**, **EN ISO 52000-1**, are relevant both for calculated EP as for EP based on measurements.

In addition to that, also **the "post-processing" EPB standards**, **EN ISO 52003-1** and **EN ISO 52018-1** are relevant for measured energy performance: an overall or partial indicator can be a measured or calculated quantity, or a combination of both, e.g. a measured envelope air tightness that is used as input into the calculation of the overall energy performance.

This is illustrated in 8.4 (Introduction of supplementary document 3).

8 Supplementary documents

8.1 General

The supplementary working documents intend to support the work of WP4: to test and demonstrate the methodology through the practical implementation of the procedures by the national test cases and to support Task 5.4, to pave the way for the *U-CERT Comparison and calculation toolkit for national Annexes*. Consequently, a close interaction with WP4 will be maintained, aiming to use the feedback from the test cases to regularly update these supplementary documents, and with Task 5.4 (*Supporting tool development*).

Overview:

Suppl doc. n°	Description
Suppl 1	Proposal for the U-CERT converged set of National Datasheets for the main EPB standards, including explanation, points of attention and remaining questions
Suppl 2	Categorization of all "Annex A" choices and explanation of (potential) interactions between the choices
Suppl 3	Template for U-CERT converged set of National Datasheets for measured energy performance
Suppl 4	Overview of all spreadsheets on individual EPB standards, publicly available at EPB Center or in preparation, with indication to what extent these can be used or made usable to quantify the impact of a specific "Annex A" choice (e.g. national versus U-CERT "Annex A" choice)
Suppl 5	Tentative indication of the input data needed for the U-CERT EPB calculation method

In the next paragraphs, each of these supplementary documents is introduced.

8.2 (Suppl 1) Proposal for the U-CERT converged set of National Datasheets for the main EPB standards

8.2.1 From Annexes A to National Datasheets

Each EPB standard allows for specific choices to be made at national or regional level, specified in a normative Annex A (template). These "Annex A" choices range from policy choices, technical choices and values, but also include choice in references to other (EPB) standards that are referenced as to provide the necessary input data for the standard.

The main step towards a coherent U-CERT EPB calculation methodology is to fill in a National Datasheet for each of the selected EPB standards, in accordance with the template given in the (normative) Annex A of each of these standards. Each EPB standard contains, in addition to Annex A, an informative Annex B with default choices.

This supplementary document contains a 'fully' worked out proposal for the U-CERT converged set of National Datasheets for the most relevant EPB standards and includes an explanation and (if relevant) points of attention for each of the "Annex A" choices.

8.2.2 Why not choose the set of Annexes B?

For completion of the National Annex / National Datasheet the (empty) template of Annex A must be followed. Annex B is a copy of Annex A, with informative default data and choices filled in.

However, it is not correct to simply use the default choices of the Annexes B, because the default choices in the Annexes B:

- were prepared for each EPB standard separately, to enable to demonstrate that the standard is operational; consequently, an overall and mutual consistency is not guaranteed;
- may contain choices that are not relevant, because they are part of a branch of (sub-)choices that is not selected;
- may not always necessarily correspond to the needs in practice.

Nevertheless, this supplementary document uses as starting point the **Annexes B** with the informative default choices instead of the empty template of Annexes A. The reasons are:

- The data and choices from Annex B provide a useful example how to fill in Annex A. They can simply be replaced by national data and choices.
- If and where data and choices from Annex B are selected as national data and choices, they are already filled in.
- This facilitates comparison of the national choices with the choices in Annex B and with choices in other countries or regions.
- The colour code as recommended in the EPB Center Guide to fill in an EPB standard's National Annex or National Datasheet (also) uses the choices in Annex B as starting point for showing the differences with the national data / choices.
- In Annex B the empty template (Annex A) is still clearly visible, because in each Table of Annex A and Annex B, the fixed elements that are part of the template of Annex A are marked with grey shading. In case of doubt, it is advised to check the EPB standard.

8.2.3 How many "Annex A" choices?

To give a first impression of the number of "Annex A" choices the **Table 6** lists the number of Tables in Annex A (/ Annex B) of the selected EPB standards. Because a few EPB standards offer choices that are not tabulated but in paragraphs, these are added as well.

Table 6 – Number of tables in Annex A of the selected EPB standards

Core EPB standard		Number of tables in Annex A
EN ISO 52000-1	Energy Performance of Buildings – Overarching EPB assessment – Part 1: General framework and procedures	33
EN ISO 52003-1	Energy performance of buildings – Indicators, requirements, ratings and certificates – Part 1: General aspects and application to the overall energy performance	7
EN ISO 52010-1	Energy performance of buildings – External climatic conditions – Part 1: Conversion of climatic data for energy calculations	9
EN 16798-1	Energy performance of buildings – Ventilation of buildings – Part 1: Indoor environmental input	25 (several choices are in

	parameters for design and assessment of energy performance of buildings addressing indoor air quality, thermal environment, lighting and acoustics (Module M1–6)	text, not in numbered tables)
EN ISO 52016-1	Energy performance of buildings – Energy needs for heating and cooling, internal temperatures and sensible and latent heat loads – Part 1: Calculation Procedures	48
EN ISO 52018-1	Energy performance of buildings — Indicators for partial EPB requirements related to thermal energy balance and fabric features — Part 1: Overview of options	14
EN 15316-4-2	Energy performance of buildings – Method for calculation of system energy requirements and system efficiencies – Part 4–2: Space heating generation systems, heat pump systems, Module M3–8-2, M8–8-2	20
EN 16798-7	Energy performance of buildings – Ventilation for buildings – Part 7: Calculation methods for the determination of air flow rates in buildings including infiltration (Module M5–5)	27 (several choices are in text, not in numbered tables)
EN 16798-5-1	Energy performance of buildings – Ventilation for buildings – Part 5–1: Calculation methods for energy requirements of ventilation and air conditioning systems (Modules M5–6, M5–8, M6–5, M6–8, M7–5, M7–8) – Method 1: Distribution and generation	17
		200
Measured EP:		
EN 15378-3	Energy performance of buildings –Heating and DHW systems in buildings – Part 3: Measured energy performance, Module M3–10 and M8–10	26

8.2.4 "Annex A" choices if national methodology deviates from EPB standard

Topics addressed in each EPB standard can be subject to public regulation. Public regulation on the same topics can, for certain applications, override the use of the EPB standard(s). In that case, the national methodology will not be fully in line with the EPB standard(s).

When an EPB standard is not adopted in full by a Member State, Annex A of the **EPB standard** should (still) be used as a template to describe the **national** calculation methodology and national choices. This helps to make the national methodologies more transparent and helps to increase overall consistency. In Annex I to the EPBD this is even required, at least for the five 'overarching' EPB standards.

NOTE If the EPB standard is not adopted in full, a formal National Annex to the EPB standard is not applicable. So the national calculation methodology and national "Annex A" choices should be published as a National Datasheet.

More detailed explanations and many examples (do's and don'ts) are presented in the EPB Center Guide to fill in an EPB standard's National Annex or National Datasheet.

8.2.5 Colour codes for the choices

The EPB Center Guide recommends the use of different font colours when preparing a National Annex or National Datasheet, to facilitate comparison with the default choices in Annex B and comparison with other regions and countries. These recommended colour codes are also applied in this supplementary document.

- Black font = from Annex A (in the tables these elements are usually grey shaded)
- Black font = National data/choices that are following the data/choices of Annex B
- ~~Blue font, strike through~~ = Data/choices of Annex B that are not used as national data/choices
- Blue font = National data/choices that are not found as data/choices in Annex B, but that are in agreement with Annex A (so: in agreement with the standard)

In case the National Datasheet is used to describe a national methodology using the Annexes A of certain EPB standards, the recommended colour code also enables a clear overview where the national method deviates from the EPB standard:

- ~~Red font, strike through~~ = (fixed) elements of Annex A that are not adopted (→ **not** in agreement with the standard)
- Red font = Elements or national data/choices that are not in agreement with Annex A (→ **not** in agreement with the standard)

8.2.6 Explanation and justification of each proposed choice

In the supplementary document 01, a yellow text block is inserted above each Table with choices, with some explanation and justification of the proposed choice. It may also include points of attention and question marks for discussion or for further investigation during the project.

An example is shown in **Figure 4**:

Table UU.7:
Type: Critical for calculation tool development

Calculation option with major impact on the complexity of the calculation procedures
U-CERT Choice: adopt without changes. This is probably the choice in most countries, because thermally coupled zones are complicated and require more input data and knowledge (e.g. on air flow patterns from zone to zone as function of time)

Table UU.7 — Choice between calculations with thermally coupled or uncoupled thermal zones (see 6.4.7)

Application	All applications	
Description	Choice [a]	[b]
Thermally uncoupled calculations	Yes	
Thermally coupled calculations	No	
Both methods are allowed	No	

[a] Only one Yes per column possible.
[b] Add more columns if needed to differentiate between applications (e.g. building categories, new or existing buildings, etc.). Note the link with the choice in Table A.9.

Table UU.8:
Type: Less crucial detail for calculation methodology

Fig. 4 – Example of explanation and justification on a specific choice, in this case Table UU.7 from "Annex A" choices of EN ISO 52016-1

In total, for the nine selected EPB standards the number of choices (Tables and sometimes paragraphs) counts to 198.

8.2.7 U-CERT *National* Datasheets: contradiction of terms?

U-CERT aims at pan-European converged set of Datasheets, so why are the converged set of U-CERT Datasheets called U-CERT National Datasheets? Isn't this a contradiction of terms?

As explained in chapter 3 (Objectives), the U-CERT converged set of National Datasheets are proposed choices to be implemented at national level in the participating U-CERT countries, at national or regional level, as National Annexes or as National Datasheets. Therefore it makes sense to call it the U-CERT converged set of National Datasheets.

Numbering:
In a National Annex or National Datasheet the Annexes and Tables are numbered as "NA" (instead of "A" or "B"). If there are more than one National Annexes (e.g. one N.A. per type of application), they may be numbered "NA", resp. "NB", etc. (see details in the Guide).

For practical reasons, for the U-CERT converged National Datasheets the Annexes and Tables are numbered as "**UU**"[1]: **Annex UU**, **Table UU.1**, etc.

8.2.8 Template of Annex A not always 100% clear

In each Annex A it must be clear what elements are part of the normative template (that are not allowed to be changed) and what are the fields where (national) choices are allowed.

[1] "UC" might have been better, but "UC" is not a readily provided option in MS Word.

To make such distinction the tables in Annex A contain grey shaded fields. These shaded fields are part of the template and consequently not open for input.

In addition, the introductory Clause A.1 ('*General*') shall not be changed. Only additional national texts are allowed and these shall be clearly marked.

Consequently, in Annex B the introductory Clause B.1 ('*General*') is identical to the introductory Clause A.1 ('*General*') and for each Table in Annex B the grey shaded fields are still grey shaded and identical to the grey shaded fields in the corresponding Table in Annex A.

The same also goes for the U-CERT National Datasheets (see for **example Figure 4** above).

Ideally, the text in between the tables is neutral and does not implicitly or explicitly contain a choice.

Unfortunately, some of the EPB standards do not follow these rules completely:

- In some EPB standards (for instance EN 16798-1, EN 16798-7, EN 16798-5-1, EN 15316-4-2) neither the Tables in Annex A, nor the Tables in Annex B have grey shaded fields.
  In the supplementary document the grey shading has been added to the Tables of Annex UU, on the basis of comparison of each Table in Annex A with each Table in Annex B.
  See the example in **Figure 5** below.
  Disclaimer: It was not always fully clear whether the texts in the Tables of Annex A are examples or normative texts.
- In some EPB standards (e.g. EN 15378-3, on measured EP, see suppl03) the Tables in Annex A have grey shaded fields, but the Tables in Annex B have not. In the supplementary document the grey shading has been added to the Tables of Annex UU.
- In for instance EN 16798-1 and EN 16798-7 (and a few in EN 16798-5-1) also some of the texts between the tables is (mis)used for providing national choices. By comparing Annex A and Annex B it has been reconstructed what belongs to the normative template of Annex A and what has been changed or added in Annex B. Subsequently, in the supplementary document (Annex UU) the text parts have been grey shaded, when it is part of the explanation given in Annex A. See the example in **Figure 5** below.
  Disclaimer: because in EN 16798-1 the explanation in Annex B differs here and there from the explanation in Annex A, it was not always fully clear whether the texts in the tables itself are examples or normative texts

Without such grey shading it is not clear what is allowed to be changed and what not.

Example:

$h_{pdu;st}$ =

A.3.3.12 Distribution of vents

The distribution of vents is given by Table A.11.

Table A.11 — Distribution of vents

Air flow path height	Windward facade	Leeward facade	...
	$C_{vent;path}$ =	$C_{vent;path}$ =	$C_{vent;path}$ =
	$C_{vent;path}$ =	$C_{vent;path}$ =	$C_{vent;path}$ =
...			

Fig.5a: Part from Annex A, no grey shading

$$h_{pdu;st} = h_z + 2 \quad \text{(B.2)}$$

B.3.3.12 Distribution of vents

The distribution is based on a vent coefficient for the ventilation zone estimated with:

$$C_{vent} = \sum_{\text{all vents}} C_{vent;path,i} \quad \text{(B.3)}$$

The distribution of vents is given by Table B.11.

Table B.11 — Distribution of vents

Air flow path height	Windward facade	Leeward facade
0,25 hz	$C_{vent;path} = 0{,}25\ C_{vent}$	$C_{vent;path} = 0{,}25\ C_{vent}$
0,75 hz	$C_{vent;path} = 0{,}25\ C_{vent}$	$C_{vent;path} = 0{,}25\ C_{vent}$

Fig.5b: Same part, from Annex B: no grey shading, so it is unclear what is part of the template and what may be changed

$$h_{pdu;st} = h_z + 2 \quad \text{(B.2)}$$

B.3.3.12 Distribution of vents

The distribution is based on a vent coefficient for the ventilation zone estimated with:

$$C_{vent} = \sum_{\text{all vents}} C_{vent;path,i} \quad \text{(B.3)}$$

The distribution of vents is given by Table UU.11.

Table UU.11 — Distribution of vents

Air flow path height	Windward facade	Leeward facade
0,25 hz	$C_{vent;path} = 0{,}25\ C_{vent}$	$C_{vent;path} = 0{,}25\ C_{vent}$
0,75 hz	$C_{vent;path} = 0{,}25\ C_{vent}$	$C_{vent;path} = 0{,}25\ C_{vent}$
...		

Fig.5c: Same part, from the U-CERT supplementary document. The grey shading missing in Annex A and Annex B has been added, based on the comparison of Annex A and Annex B, to make clear what is open for national choice: the non-grey shaded elements.

Fig. 5 – Example from EN 16798-7: missing grey shading and choices outside the Tables

So only the non-shaded elements are allowed to be edited to stay in line with the standard (in casu: in line with the normative template of Annex A).

8.3 (Suppl 2) Categorization of all "Annex A" choices

8.3.1 Comprehensive subdivision

To cluster and prioritize the discussion it is needed to categorize each of the "Annex A" choices according to the nature of the choices:

NOTE Any subdivision is to some extent arbitrary. Therefore it should only be regarded as a rough impression for practical use.

1) Choice of **references to other (EPB) standards**:
   The first choice in each EPB standard (Table A.1) is the choice which other standards it refers to as the (normative) source to obtain the input data. If the input data can be obtained from another standard in the set of EPB standards, the default choice in Annex B (Table B.1) is "of course" that particular EPB standard.
   This choice makes it possible for a country to gradually (step by step) implement the whole set of EPB standards.
2) Choices related to the **preparation** of the calculations, e.g.
   a. Assessment boundaries.
   b. Categorization of buildings, spaces, services and assessment types.
   c. Building partitioning (thermal zones, system service areas)

   NOTE 1 Most of these choices have a strong impact on the level of complexity of the calculation.
   NOTE 2 a. and b. are typically **policy related** choices.
3) Choices on the **indoor environment conditions**, e.g.:
   a. Required or assumed conditions of use, per building or space category.
   b. Assumed indoor boundary conditions (e.g. internal heat gain, non-EPB (e.g. "plug in") electricity use)

   NOTE These choices depend on choices made under 1).
4) Choices on the **outdoor environment conditions**:
   a. Climatic data
5) Choices on the **calculation methodology** (including operation and control):
   a. Different options
   b. Calculation simplifications
   c. Parameter values (physical values, correlation factors, default values, ..)

   NOTE With distinction between choices with expected **significant** impact on the assessed energy performance and choices with **minor** impact.
6) Choices on **properties of building or system components, products or assemblies** as input data for the calculation:
   a. References to product standards
   b. Simplifications
   c. Default values

   NOTE Simplifications may have a serious impact on the assessed energy performance, e.g. if it implies that the influence of interactions is disregarded.
7) Choices that are related to the **post-processing** of the calculation results:
   a. EPB indicators (overall and partial)
   b. Requirements

c. Rating

NOTE 1 This actually concerns all choices in EN ISO 52003-1 and EN ISO 52018-1.
NOTE 2 These are typically **policy related** choices.

8) Choices on the **methodology** for **measured** energy performance
   a. Different options
   b. Parameter values

NOTE Many choices are applicable for both the calculated EP and for measured EP. In this category we concentrate on the choices that are only relevant for measured EP.

In addition, **interactions** between the choices may occur that need to be identified; some have already been mentioned above.

Attention ad 7: U-CERT Task 3.2, *Development of a set of user centred and effective overall and partial indicators, including SRI*, focuses on the EPB indicators and ratings. Therefore the choices for the EPB standards EN ISO 52003-1 and EN ISO 52018-1 are outside Task 3.1.

Attention ad 8: is outside Task 3.1.

8.3.2 Simplified subdivision

For the purpose of the clustering and prioritization of the discussion a **simplified subdivision** is sufficient and better suited.

The following subdivision is applied in the supplementary document, see **Table 7**:

Table 7 – Simplified subdivision of "Annex A" choices

Type of choice		Comment
A	References to other (EPB) standards	If one or more EPB standards are replaced by other references it can have serious impact on the methodology
B	Categorization	of buildings, spaces, services, etc.
C	Critical for calculation tool development	
D	Important factor for calculation methodology	incl. pre-processing (e.g.zoning) and/or indoor/outdoor conditions
E	Less crucial detail for calculation methodology	incl. pre-processing (e.g.zoning) and/or indoor/outdoor conditions
F	Measured energy performance	
G	Post-processing	Indicators, rating, ..; indicators may also be important factor!
H	Other	No (direct) impact on EP calculation methodology (e.g. system sizing)

8.3.3 Result

The result is presented in an Excel file that enables sorting per standard and table or sorting per theme.

Example:

Sort on Types (A-H) | Sort on Table numbers

OrderAll	OrderSt	EPB standard	Table (number and subject)	A References to other (EPB) standards	B Categorization	C Critical for calculation tool development	D Important factor for calculation methodology	E Less crucial detail for calculation methodology	F Measured energy performance	G Post-processing	H Other	Commen
57	2	**EN 16798-1**	Table UU.2 — Default design values of the indoor operative temperature in winter and summer for buildings with mechanical cooling systems								1	Only for sizing of heating and
58	3	**EN 16798-1**	Table UU.3 — Local thermal discomfort design criteria								1	Only for sizing of heating and
59	4	**EN 16798-1**	Clause UU.2.2 Default acceptable indoor temperatures for buildings without mechanical cooling systems				1					Adaptive temperatures
60	5	**EN 16798-1**	Table UU.4 — Indoor operative temperature correction ($\Delta\Theta_o$) applicable for buildings equipped with fans or personal systems providing building occupants with personal control over air speed at occupant level					1				
61	6	**EN 16798-1**	Table UU.5 — Temperature ranges for hourly calculation of cooling and heating energy in four categories of indoor environment					1				
62	7	**EN 16798-1**	Table UU.6 — Design ventilation rates for sedentary, adults, non-adapted persons for diluting emissions (bio effluents) from people for different categories								1	Only for sizing of ventilatio

Fig.6a: sorted per standard

Sort on Types (A-H) | Sort on Table numbers

OrderAll	OrderSt	EPB standard	Table (number and subject)	A References to other (EPB) standards	B Categorization	C Critical for calculation tool development	D Important factor for calculation methodology	E Less crucial detail for calculation methodology	F Measured energy performance	G Post-processing	H Other	Comm
7	6	**EN ISO 52000-1**	Table UU.6 — Differentiation of space categories		1							
8	7	**EN ISO 52000-1**	Table UU.7 — Space categories		1							
9	8	**EN ISO 52000-1**	Table UU.8 — Application types		1							
10	9	**EN ISO 52000-1**	Table UU.9 — EPB assessment types		1							
11	10	**EN ISO 52000-1**	Table UU.10 — Combination services types		1							
12	11	**EN ISO 52000-1**	Table UU.11 — Electricity use types		1							
13	12	**EN ISO 52000-1**	Table UU.12 — Electricity generation types		1							
84	2	**EN ISO 52016-1**	Table UU.2 — Choice between hourly or monthly calculation method			1						
89	7	**EN ISO 52016-1**	Table UU.7 — Choice between calculations with thermally coupled or uncoupled thermal zones			1						
17	16	**EN ISO 52000-1**	Table UU.16 — Weighting factors (based on gross or net calorific value)				1					
18	17	**EN ISO 52000-1**	Table UU.17 — kexp-factor				1					
19	18	**EN ISO 52000-1**	Table UU.18 — Building services considered in the energy performance calculation				1					
20	19	**EN ISO 52000-1**	Table UU.19 — Principle assumed presence of systems				1					
21	20	**EN ISO 52000-1**	Table UU.20 — Specification of the useful floor area				1					
22	21	**EN ISO 52000-1**	Table UU.21 — Type or types of metric for the building size				1					
			Table UU.22 — Which space categories are contributing to the									

Fig.6b: sorted per type

Fig. 6 – Example of the Excel file with all 200 choices of the 9 selected EPB standards categorized in 8 types

For the nine selected EPB standards, the number of choices (Tables, sometimes paragraph without table) amounts 200, see Table 6 in 8.2.3.

The types have also copied into each explanation box of Supplementary document 1, see example in **Figure 4**:

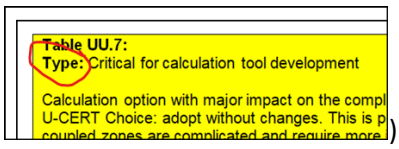

8.4 (Suppl 3) Template for U-CERT converged set of National Datasheets for measured energy performance

For U-CERT, the main links between EP assessment based on calculation procedures ('asset rating'[2]) and EP assessment based on measured data ('operational rating'[2]) are shown in **Figure 7**.

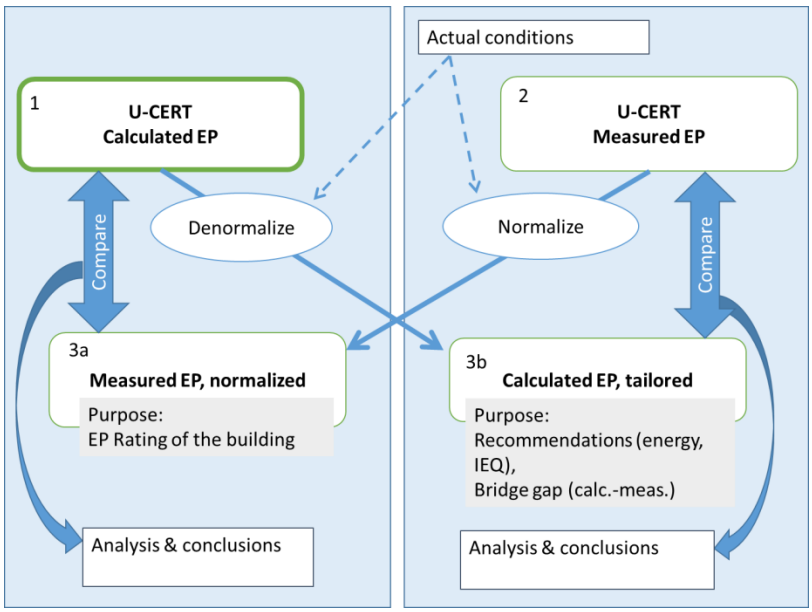

Fig. 7 - Main links between EP assessment based on calculation procedures and EP assessment based on measured data

In principle, a similar supplementary document to fill in the "Annex A" choices for the EPB standards dealing with the assessment of the energy performance by measured energy can be made as done in supplementary document 02 for the EPB standards dealing with the calculated energy performance.

But there are a few differences:

1) There is **only one EPB standard** specifically on measured energy performance: **EN 15378-3:2017,** *Heating systems and water based cooling systems in buildings — Heating and DHW systems in buildings — Part 3: Measured energy performance*.
   Moreover, this standard focuses only on heating and DHW systems.
2) However, most of the choices in the **overarching EPB standard**, **EN ISO 52000-1**, are relevant both for calculated EP as for EP based on measurements. This is illustrated by **Table 8** and **Table 9** below.
   It would be duplication of work to repeat these choices in the supplementary document 03.
3) In addition to that, also **the "post-processing" EPB standards**, **EN ISO 52003-1** and **EN ISO 52018-1** are relevant for measured energy performance: an overall or partial indicator can be a measured or calculated quantity, or a combination of both, e.g. a measured envelope air tightness that is used as input into the calculation of the overall energy performance.

[2] The terms "asset rating" and "operational rating" are actually incorrect and need to be avoided, because assessing the energy performance is not the same as EP rating. Rating is part of the post-processing: comparison of the assessed EP against specific benchmarks.

Table 8 — Relevance of the successive clauses in EN ISO 52000-1 for different applications

Copied from EN ISO 52000-1; highlighting added

Clause	Calculated EP	Measured EP	Inspection
3 Terms and definitions	Yes	Yes	Yes
4 Symbols, units, subscripts and abbreviations	Yes	Yes	Yes
5 Description of the overarching framework and procedures (Routing,) The overarching reference modular structure	Yes	Yes	Yes
6 Preparation steps (type of object, building category and space categories, type of application, type of assessment, building services)	Yes	Yes	Yes
7 Calculated energy performance	Yes	No (except for validation)	No (except for comparison)
8 Measured energy performance	No	Yes	Partly
9 Overall assessment of the energy performance of buildings: Assessment boundaries, energy balance, performance indicator, share of renewable, energy performance indicators for technical building systems)	Yes	Yes	Partly
10 Building zoning	Yes	Partly [a]	Partly [a]
11 Calculation of the overall energy performance, routing and balance (Delivered and exported energy balance, Building thermal needs, Technical building systems, Operating conditions, Climatic and external environment data)	Yes	No (except for validation)	No (except for comparison)
12 Common overarching output	Yes	Yes/ partly [a]	Yes/ partly [a]
13 Quality control	Yes	Yes	Yes/ partly [a]
14 Compliance check	Yes	Yes	Yes/ partly [a]
Annex A, Annex B (Input and method selection data sheet)	Yes	Yes	Yes/ partly [a]
Annex C (Common subscripts)	Yes	Yes	Yes
Annex D (Calculation of measured energy performance)	Yes	Yes	Partly [a]
Annex E (Calculation methods for energy performance indicators per part of a building and/or service)	Yes	Partly [a]	No
[a] See ISO/TR 52000 2 [6] for further explanation.			

Table 9 – Which "Annex A" Tables in EN ISO 52000-1 are only for calculated EP and which are only for measured EP

All other Tables are for both calculated and measured EP

Annex A Tables only for calculated EP:	**Comments**
Table UU.11 — Electricity use types	*Could be debated* [a)]
Table UU.12 — Electricity generation types	*Could be debated* [a)]
Table UU.19 — Principle assumed presence of systems	
Table UU.22 — Which space categories are contributing to the reference size	
Table UU.23 — Perimeter specification	*Could be debated* [a)]
Table UU.24 — Perimeter choice	
Table UU.28 — Priority for generation system, export	
Table UU.29 — Subdivision rules	
Table UU.30 — Energy flows taken into account in the building balance	*Could be debated* [a)]
Table UU.31 — Electrical uses not satisfied by on-site electricity production	*Could be debated* [a)]
Table UU.32 — Matching factor of produced and used electricity	
[a):] *Could also be applicable for measured EP in case of detailed measurements*	
Annex A Tables only for measured EP:	**Comments**
Table UU.13 — Gross calorific value of some common solid fuels	
Table UU.14 — Gross calorific value of some common liquid fuels	
Table UU.15 — Gross calorific values of some gaseous energy carriers	
Table UU.25 — Conversion factors for net to gross calorific values for energy carriers	

Attention: Because the proposal for a measured energy performance is part of Task 3.2, the supplementary document 03 only contains a template without filled in choices or explanation and justification.

8.5 (Suppl 4) Overview of EPB standards' spreadsheets and usability to quantify the impact of a specific "Annex A" choice

A fourth supplementary document (**Suppl 4, an Excel file**) has been set up that list all "Annex A" choices of all selected EPB standards and shows whether the spreadsheets on the individual EPB standards that are publicly available at EPB Center or in preparation could be used or made usable to quantify the impact of a specific "Annex A" choice.

If and where this is possible, a comparison of the impact of the national versus U-CERT "Annex A" choice can be made using the spreadsheets.

In general, each spreadsheet deals with one individual EPB standard only, although there are a few spreadsheets in preparation in which a few EPB standards have been or are being combined. This means that the comparison shows only the effect on the output of the specific EPB standard. Nevertheless, that can be very useful information.

The question, to be discussed in the subsequent tasks of the project (Task 4.2, Task 5.4), is how to use the spreadsheets. For instance:

- (simplest): Use some **reference building(s)** as input for the spreadsheet for each (selected) EPB standard to quantify the difference of the national "Annex A" choices (national method) versus the U-CERT "Annex A" choices (U-CERT method: EPB standards with U-CERT National Datasheets).
  In this case no use is made from the pilot buildings; for each EU Member State one would "only" need to "translate" the national method into national choices in the template of "Annex A"(ergo: into "National Datasheets") without information on the pilot buildings.
- (more challenging) Take **the U-CERT pilot case buildings**, but simplified in such a way that it can be used as input for the spreadsheet for each (selected) EPB standard to quantify difference between national versus U-CERT National Datasheets.
  This requires an overview of all input data to be requested from the pilot cases. Such an overview is not evident, see supplementary document 05.

The supplementary document consists of two overviews:

Overview 1: the status of the spreadsheets, listed per EPB standard.

Step 1: The overview shows for each EPB standard whether there is a spreadsheet available and whether there is an update in preparation, with a brief description of the main features. See **Figure 8** for an illustration.

	Relevance (=> Priority)	Module / Priority	EPB standard	Short description	(up to date) Spreadsheet(s) available?	Subject	Comments	Main added features
5		M1 Overarching						
12	Core procedures for indoor environment requirements and for setting conditions of use	High priorit	EN 16798-1	**Indoor environment requirements / conditions of use**	In preparation	Use Profile Generator	New, in preparation	Spreadsheet to generate for a whole year, with det occupancy profiles, com system operation profiles categories of spaces. Lin EPB standards (EN ISO needs) and others [syste
13	Core procedures to obtain climatic data for building energy and indoor comfort calculations and for thermal solar and PV systems	High priorit	EN ISO 52010-1	**Climatic conditions, conversion of solar radiation to vertical and tilted planes**	2019-11-20	Demo (EN) ISO 52010-1 (Climatic data conversion)	Covers most of the features, especially the link with the spreadsheet on EN ISO 52016-1	
14					2021-01-05	Conversion tool from the JRC TMY climates data to input for ISO 52010-1.	gives access to hourly climatic data for almost any location in the world	
15		M2 Building						
16	Core part of the calculation procedures	High priorit	EN ISO 52016-1	**Energy needs heating and cooling and indoor temperatures**	2019-11-20	Demo (EN) ISO 52016-1 (energy needs heating and cooling, internal temperatures and loads)	Update in preparation	For demonstration: hourl and hourly link to EN 153 available and used in Se Example calculations
17					In preparation	Solar shading calculation	In preparation and to be coupled to Demo (EN) ISO 52016-1	
18	Core procedures for partial building fabric and needs indicators	High priorit	EN ISO 52018-1	**Partial indicators building fabric and needs**	No: this EPB standard contains no calculation procedures		The choices may show on spreadsheets of other EPB standards, especially EN ISO	
19	Probably already used world-wide, data can be pre-calculated as input for EN ISO	Low priority	EN ISO 6946	**Thermal resistance and transmittance**	2015-06-15			
20	Probably already used world-wide, data are usually pre-calculated by specialists, as input for EN ISO 13789 and (in turn) EN ISO 52016-1	Low priority	EN ISO 10211	**Detailed calculation thermal bridges**	--	Too detailed for spreadsheet; plus: no prescribed calculation procedures, but performance criteria for		
21	Probably not yet used world-wide, especially the hourly calculation procedures. The hourly and monthly calculation procedures of EN ISO 13370 are fully integrated in EN ISO 52016-1	Medium priority	EN ISO 13370	**Heat transfer ground floor**	2015-06-15			
	Not clear if and how these calculation							

Fig. 8 – Illustration of part of the first overview (draft version): the status of the spreadsheets, listed per EPB standard

Example (a):

In the overview you find for instance information on the spreadsheet(s) related to EN ISO 52016-1, the EPB standard for the calculation of energy needs for heating and cooling and indoor temperatures.

See **Figure 8**: in rows 16 you can read that an up-to-date spreadsheet is available since November 2019; in row 17 you can also read that an update is in preparation, with specific additional features, expected to become available end of February 2021.

Overview 2: List of all "Annex A" choices of the selected EPB standards and if these can be varied in one of the spreadsheets

Step 2: The second overview lists all "Annex A" choices of the selected EPB calculation standards. The first question is: is the choice relevant for the U-CERT calculation methodology? Therefore the **category** of each choice has been copied from the supplement 2 document. See **Figure 9**.

	A	B	C	D	E	F	G	H	I	J	K	L
1		U-CERT, WP3.1	See sheet Explanation									
2			Table (number and subject)	References to other (E	Categorization	Critical for calculation tool development	Important factor for calculation methodology	Less crucial detail for calculation methodology	Measured energy performance	Post-processing	Other	Comments
3		EPB standard		A	B	C	D	E	F	G	H	
51		EN ISO 52016-1	Table A.11 — Convective fractions (see 6.5.6.2)					1				
52		EN ISO 52016-1	Table A.12 — Specification of internal partitions (see 6.5.6.3.1)					1				
53		EN ISO 52016-1	Table A.13 — Distribution of mass of opaque and ground floor elements (see 6.5.7.2 and 6.5.7.3)					1				
54		EN ISO 52016-1	Table A.14 — Specific heat capacity of opaque and ground floor elements (see 6.5.7.2 and 6.5.7.3)					1				
55		EN ISO 52016-1	Table A.15 — Solar absorption coefficient of external opaque surfaces (see 6.5.7.2)					1				
56		EN ISO 52016-1	Table A.16 — Coefficient to limit assumed temperature in adjacent thermally unconditioned zone (see 6.5.9)					1				
			Table A.17 — Specific heat capacity of air									

Explanation / Status spreadsheets / Annex A choices vs spreadsheets

Fig. 9 – Illustration of the left part of the second overview (draft): the category of each Table A.x of each selected EPB standard

Example (b):

Table A.15 of EN ISO 52016-1, on the solar absorption coefficient of external opaque surfaces is categorized as a *"less crucial detail for the calculation methodology"*, so it is a relevant Table to be filled in. But is there a spreadsheet to test the sensitivity of the choice? That is the next step:

Step 3: In the same second overview, in the columns more to the right, it is shown, again for each Table A.x in each selected EPB standard, whether a spreadsheet) related to this standard is available and, if so, whether it can be used to quantify the impact of the choice on the result. See **Figure 10** for an illustration.

	A	B	C	M	N	O	P	Q
1		U-CERT, WP3.1	See sheet Explanation					
2			Table (number and subject)	Recent updated spreadsheet available	Can be varied in available spreadsheet	May be made variable in updated spreadsheet	Cannot be varied in the spreadsheet	Comments
3		EPB standard						
51		EN ISO 52016-1	Table A.11 — Convective fractions (see 6.5.6.2)	1	1			
52		EN ISO 52016-1	Table A.12 — Specification of internal partitions (see 6.5.6.3.1)	1	1			
53		EN ISO 52016-1	Table A.13 — Distribution of mass of opaque and ground floor elements (see 6.5.7.2 and 6.5.7.3)	1		1		
54		EN ISO 52016-1	Table A.14 — Specific heat capacity of opaque and ground floor elements (see 6.5.7.2 and 6.5.7.3)	1	1			As manual input
55		EN ISO 52016-1	Table A.15 — Solar absorption coefficient of external opaque surfaces (see 6.5.7.2)	1	1			
56		EN ISO 52016-1	Table A.16 — Coefficient to limit assumed temperature in adjacent thermally unconditioned zone (see 6.5.9)	1			1	Adjacent zones not in spreadsheet
			Table A.17 — Specific heat capacity of air					

NOTE In this illustration the columns D-L have been hidden for improved readability

Fig. 10 – Illustration of the right part of the second overview (draft): the usability of the spreadsheets for the Annex A choices

Example (c):

So (see example (b)), Table A.15 on the solar absorption coefficient of external opaque surfaces is a relevant table to fill in. Let us now assume that for the U-CERT calculation methodology we intend to opt for a variable value, in three categories, in line with the mandatory template of Table A.15 (grey shaded cells), but different from the choice in informative Table B.15 which is a fixed value of 0,6. This is shown in **Figure 11**.

The question is then: is there a spreadsheet to compare the impact of this intended choice against the fixed value of 0,6.? For instance because the fixed value of 0,6 is the national choice in your country.

In the second overview we can read (see **Figure 10**) that, indeed, the spreadsheet on EN ISO 52016-1 can be used for this purpose.

Continued at next page

Table UU.15 — Solar absorption coefficient of external opaque surfaces (see 6.5.7.2)

	Choice
Differentiation in solar absorption coefficient?	~~No~~Yes
If Yes: specify the procedure to classify the three categories (free text)	
Category	Specification
Category 1 $\alpha_{sol} = 0,3$ (light colour)	~~Not applicable~~Any white coloured material, aluminium
Category 2 $\alpha_{sol} = 0,6$ (intermediate colour)	~~Not applicable~~Any medium coloured material, galvanized iron, copper
Category 3 $\alpha_{sol} = 0,9$ (dark colour)	~~Not applicable~~Any dark coloured material, lead
	Choice
If No: choose the default category	~~2~~Not applicable

Fig. 11 – As illustrative example: draft U-CERT choice for Table A.15 from EN ISO 52016-1, on the solar absorption coefficient of external opaque surfaces

As example, the spreadsheet was used to perform a calculation on a well-insulated detached house (example 1 from CEN ISO/TR 52016-2), assumed to be located in Athens.

Result:

Solar absorption coefficient for all opaque external constructions	Annual heating needs (kWh)	Annual cooling needs (kWh)	Annual heating and cooling needs (kWh)
0,8	470	4534	5004
0,2	617	3811	4428
Difference:	+30% [a)]	-16%	-17%
a): High percentage, but on a small amount			

Conclusion: in this case the solar absorption coefficient value has a significant impact on the result, so it makes sense to differentiate the value. On the other hand, this increases the

burden of the assessor and decreases the reproducibility and reliability, because it may not always be clear which value to take.

Useful information:

- Spreadsheets publicly available at the EPB Center

8.6 (Suppl 5) Tentative indication of the input data needed for using the U-CERT EPB calculation method

The input data for each EPB standard can be divided into different types, with respect of the typical supplier of these data:

1) Other EPB standards (output from other EPB standards used as input)
2) Regulator (typically: all "Annex A" choices of each EPB standard)
3) Building/system designer (typically: specific project data)
4) Product/component manufacturer or supplier (typically: product/component data)

Ad 1: Input data coming from another EPB standard are disregarded, because they are not input for the overall EPB assessment.

Ad 2: This is covered in the supplementary document 1 (U-CERT National Datasheets). This includes the standard outdoor environment conditions (climate) and indoor environment conditions (conditions of use).

Conclusion: it is only the **project data** and **product/component data** that we are interested in.

And, of course, only for the **selected EPB standards** and for the **selected choices** in the U-CERT set of converged National Datasheets.

According to the **common template for all EPB standards**, each EPB standard contains a clause, usually 6.3, that contains **a complete list of all input data** including a reference to the source document.

An example is shown in **Figure 12**.

Table 8 —Variables and terms used for the calculation procedure

Name	Symbol	Unit	Range	Origin Module	Varying
Calculation parameters					
Thermal capacity the generator at full load for the time step conditions	$\Phi_{gen,LR100}$ (t)	kW	[0:+∞]	EN 14825 EN 14511 series EN 12309–6	NO
Thermal energy delivered by the heat pump at full load for the time step condition	$Q_{gen,LR100}$(t)	kWh	[0:+∞]	EN 14825 EN 14511 series EN 12309–6	NO
COP at full load for the time step conditions	$COP_{gen,LR100}$(t)	-	[0:10]	EN 14825 EN 14511 series EN 12309–6	NO
heat output to the heating distribution sub-system(s)	$Q_{H,gen,out}$	kWh	0...∞	M3–6	YES
heat output to the domestic hot water distribution sub-system(s)	$Q_{W,gen,out}$	kWh	0...∞	M3–6	YES
Multiplying factor for adaptation of COP without influence of auxiliaries	$\phi_{LR;cont;min;net}$	-	[0–1]	Local	NO
Fraction of power used by auxiliaries	$f_{gen;aux}$	-	[0–1]	Local	NO
Weighting factor used for construction of the COP matrix for column k and line l	$\phi_{COP,kl}$	-	[0–10]	Local	NO
Multiplying factor for adaptation of COP at full load from a reference situation	$\phi_{gen;COP;LR100;}$	-	[0–10]	Local	NO
Multiplying factor for adaptation of the thermal capacity at full load from a reference situation	$\phi_{gen;Pn;LR100}$	-	[0–10]	Local	NO
Load factor ratio	LR	-	[0–1]	Local	NO

Fig. 12 – Example of Table with input data (here: part of 1 of the 4 Tables with lists of input data from EN 15316-4-2)

In **Figure 12** the column with "Origin module" shows which data have:

- ***another EPB standard*** as source for the input data, usually referenced by the *EPB module* number Mx.y (see *Useful information* below);
- a ***product standard*** as source for the input data;
- ***the project*** as source for the input data (in this standard called "local").

NOTE The **corresponding spreadsheet** should ideally contain the same lists, if it has been made up-to-date with the published standard.

It is probably helpful to distinct input data that are required "**in general**" and those that are only required in "**special situations**".

Pareto principle:

In many standards the "Pareto principle" seems to apply: 80% of the required input data is needed in only 20% of the situations.

On the other hand: the distinction between "general" and "special" is arbitrary…

Illustrative example:
EN ISO 52016-1 (energy needs for heating and cooling):

- General:
  - Area, orientation & tilt, *U*-value and solar absorptance of opaque constructions
  - Same for windows, plus *g*-value
  - …
- Special:
  - Dimensions of obstacles, overhangs, side-fins (of own or other building): dimensions
  - Heat transfer to adjacent unconditioned spaces

Some **extra challenges**:

- For a non-expert on the details of the EPB standards it may be a challenge to have a proper understanding of each input data, if the main source of information is the symbol and name of the parameter.
- Because most EPB standards cover a wide variety of possible technologies and combinations of technologies, some of which are more conventional, others more innovative or exotic, the listing of the input data is less straightforward as one might expect at first instance.
- Note that the choices made in the U-CERT National Datasheets may also have an effect on which input data are needed.

Useful information:

- About main input data: EPB Center webinar 7 Example calculations - (1) Introduction and overarching calculation procedures (presentation van Dijk)
- About the EPB modular structure: https://epb.center/epb-standards/modular-structure/;
- About the link between the product standards & the EPB standards: https://epb.center/epb-standards/products-and-product-standards/

9 References

[1] European Parliament and Council of the European Union, *Directive (EU) 2018/844,* Brussels, 2018 (EPBD).

[2] van Dijk, Dick, in cooperation with Annet van der Horn, *Guide to fill in an EPB standard's National Annex or National Datasheet*, EPB Center, Nov. 4, 2019

Annex 1, Overview of all EPB standards

See: https://epb.center/documents/?title=&group=2

NOTES:

- To keep the table manageable the accompanying **technical reports** are not included in the table.
- The **modules** (M1, M2, ..) correspond to the modular system of the EPB standards. At the EPB Center website these are called "**Topics**"
- The **themes** may slightly deviate from the "Themes" at the EPB Center website
- Some document titles and scopes are **duplicate**, e.g. because some standards are (temporarily) different between CEN and ISO.

Number	Title	Theme
M1, EPB - Overarching EPB Assessment Procedures, ……		
EN ISO 52000-1	Energy Performance of Buildings – Overarching EPB assessment – Part 1: General framework and procedures	(EP) Calculation procedures
EN 17423	Energy performance of buildings - Determination and reporting of Primary Energy Factors (PEF) and CO2 emission coefficient - General Principles, Module M1-7	Other (background information)
EN ISO 52000-3	Energy Performance of Buildings – Determination and reporting of Primary Energy factors (PEF) and CO2 emission factors (in preparation)	Other (background information)
EN ISO 52003-1	Energy performance of buildings – Indicators, requirements, ratings and certificates – Part 1: General aspects and application to the overall energy performance	EP post-processing (EP indicators, requirements or ratings)
ISO 17772-1	Energy performance of buildings – Indoor environmental quality – Part 1: Indoor environmental input parameters for the design and assessment of energy performance of buildings	EP pre-processing (indoor environment)
EN 16798-1	Energy performance of buildings – Ventilation of buildings – Part 1: Indoor environmental input parameters for design and assessment of energy performance of buildings addressing indoor air quality, thermal environment, lighting and acoustics (Module M1–6)	(EP) Calculation procedures
EN ISO 52007-1	Energy performance of buildings — Indoor environmental quality — Part 1: Indoor environmental input parameters for the design	EP pre-processing (indoor environment)

	and assessment of energy performance of buildings (in preparation)	
EN ISO 52010-1	Energy performance of buildings - External climatic conditions - Part 1: Conversion of climatic data for energy calculations	EP pre-processing (outdoor environment)
EN 15459-1	Energy performance of buildings – Economic evaluation procedure for energy systems in buildings – Part 1: Calculation procedures, Module M1–14	Other (Economic procedures)
EN ISO 52011-1	Energy performance of buildings – Economic evaluation procedure for energy systems in buildings – Part 1: Calculation procedures, Module M1–14 (in preparation)	Other (Economic procedures)
M2, EPB - Building and Building Elements, ……		
EN ISO 52016-1	Energy performance of buildings – Energy needs for heating and cooling, internal temperatures and sensible and latent heat loads - Part 1: Calculation Procedures	(EP) Calculation procedures
EN ISO 52016-3	Energy performance of buildings – Energy needs for heating and cooling, internal temperatures and sensible and latent heat loads - Part 3: Calculation procedures regarding adaptive building envelope elements (in preparation)	(EP) Calculation procedures
EN ISO 52016-5	Energy performance of buildings – Energy needs for heating and cooling, internal temperatures and sensible and latent heat loads - Part 5: Specific criteria and validation procedures (in preparation)	(EP) Calculation procedures
EN ISO 52017-1	Energy performance of buildings - Sensible and latent heat loads and internal temperatures – Part 1: Generic calculation procedures	Other (reference calculation procedures)
EN ISO 52018-1	Energy performance of buildings — Indicators for partial EPB requirements related to thermal energy balance and fabric features — Part 1: Overview of options	EP post-processing (EP indicators, requirements or ratings)
EN ISO 13789	Thermal performance of buildings - Transmission and ventilation heat transfer coefficients - Calculation method	(EP) Calculation procedures
EN ISO 13370	Thermal performance of buildings – Heat transfer via the ground – Calculation methods	(EP) Calculation procedures
EN ISO 6946	Building components and building elements – Thermal resistance and thermal transmittance – Calculation method	(EP) Calculation procedures
EN ISO 10211	Thermal bridges in building construction - Heat flows and surface temperatures - Detailed calculations	(EP) Calculation procedures
EN ISO 14683	Thermal bridges in building construction – Linear thermal transmittance – Simplified	(EP) Calculation procedures

	methods and default values	
EN ISO 10077-1	Thermal performance of windows, doors and shutters – Calculation of thermal transmittance – Part 1: General	(EP) Calculation procedures
EN ISO 10077-2	Thermal performance of windows, doors and shutters – Calculation of thermal transmittance – Part 2: Numerical method for frames	(EP) Calculation procedures
EN ISO 12631	Thermal performance of curtain walling – Calculation of thermal transmittance	(EP) Calculation procedures
EN ISO 13786	Thermal performance of building components – Dynamic thermal characteristics – Calculation methods	(EP) Calculation procedures
EN ISO 52022-3	Energy performance of buildings – Thermal, solar and daylight properties of building components and elements – Part 3: Detailed calculation method of the solar and daylight characteristics for solar protection devices combined with glazing	(EP) Calculation procedures
EN ISO 52022-1	Energy performance of buildings – Thermal, solar and daylight properties of building components and elements – Part 1: Simplified calculation method of the solar and daylight characteristics for solar protection devices combined with glazing	(EP) Calculation procedures
M3, EPB - Heating Systems and water based cooling systems in buildings		
EN 15316-1	Energy performance of buildings – Method for calculation of system energy requirements and system efficiencies – Part 1: General and Energy performance expression, Module M3–1, M3–4, M3–9, M8–1, M8–4	(EP) Calculation procedures
EN 12831-1	Energy performance of buildings – Method for calculation of the design heat load – Part 1: Space heating load, Module M3–3	Building, system or component design procedures
EN 15316-2	Energy performance of buildings – Method for calculation of system energy requirements and system efficiencies – Part 2: Space emission systems (heating and cooling), Module M3–5, M4–5	(EP) Calculation procedures
ISO 52031	Energy performance of buildings – Method for calculation of system energy requirements and system efficiencies – -- Space emission systems (heating and cooling)	(EP) Calculation procedures
EN 15316-3	Energy performance of buildings – Method for calculation of system energy requirements and system efficiencies – Part 3: Space distribution systems (DHW, heating and cooling), Module M3–6, M4–6, M8–6	(EP) Calculation procedures
EN ISO 52032	Energy performance of buildings -- Space distribution systems (DHW, heating and cooling), Module M3-6, M4-6, M8-6 (in preparation)	(EP) Calculation procedures

EN 15316-5	Energy performance of buildings – Method for calculation of system energy requirements and system efficiencies – Part 5: Space heating and DHW storage systems (not cooling), Module M3–7, M8–7	(EP) Calculation procedures
EN 15316-4-1	Energy performance of buildings – Method for calculation of system energy requirements and system efficiencies – Part 4–1: Space heating and DHW generation systems, combustion systems (boilers, biomass), Module M3–8-1 and M 8–8-1	(EP) Calculation procedures
EN 15316-4-2	Energy performance of buildings – Method for calculation of system energy requirements and system efficiencies – Part 4–2: Space heating generation systems, heat pump systems, Module M3–8-2, M8–8-2	(EP) Calculation procedures
EN 15316-4-3	Energy performance of buildings – Method for calculation of system energy requirements and system efficiencies – Part 4–3: Heat generation systems, thermal solar and photovoltaic systems, Module M3–8-3, M8–8-3, M11–8-3	(EP) Calculation procedures
EN 15316-4-4	Energy performance of buildings – Method for calculation of system energy requirements and system efficiencies – Part 4–4: Heat generation systems, building-integrated cogeneration systems, Module M8–3-4, M8–8-4, M8–11-4	(EP) Calculation procedures
EN 15316-4-5	Energy performance of buildings – Method for calculation of system energy requirements and system efficiencies – Part 4–5: District heating and cooling, Module M3–8-5, M4–8-5, M8–8-5, M11–8-5	(EP) Calculation procedures
EN 15316-4-8	Energy performance of buildings – Method for calculation of system energy requirements and system efficiencies – Part 4–8: Space heating generation systems, air heating and overhead radiant heating systems, including stoves (local), Module M3–8-8	(EP) Calculation procedures
EN 15378-3	Energy performance of buildings –Heating and DHW systems in buildings – Part 3: Measured energy performance, Module M3–10 and M8–10	(EP) Measurement procedures
EN 15378-1	Energy performance of buildings – Heating systems and DHW in buildings - Part 1: Inspection of boilers, heating systems and DHW, Module M3–11, M8–11	Inspection procedures
M4, EPB - Cooling Systems, ……		
EN 16798-9	Energy performance of buildings –Ventilation for buildings – Part 9: Calculation methods for energy requirements of cooling systems (Modules M4-1, M4-4, M4-9) – General	(EP) Calculation procedures
EN 16798-15	Energy performance of buildings – Ventilation	(EP) Calculation

	for buildings – Part 15: Calculation of cooling systems (Module M4–7) – Storage	procedures
EN 16798-13	Energy performance of buildings – Ventilation for buildings – Part 13: Calculation of cooling systems (Module M4–8) – Generation	(EP) Calculation procedures
EN 16798-17	Energy performance of buildings – Ventilation for buildings – Part 17: Guidelines for inspection of ventilation and air conditioning systems (Module M4–11, M5–11, M6–11, M7–11)	Inspection procedures
M5, EPB - Ventilation and Ventilation Systems, ……		
EN 16798-3	Energy performance of buildings – Ventilation for buildings – Part 3: For non-residential buildings – Performance requirements for ventilation and room-conditioning systems (Modules M5–1, M5–4)	Building, system or component design procedures
EN 16798-7	Energy performance of buildings – Ventilation for buildings – Part 7: Calculation methods for the determination of air flow rates in buildings including infiltration (Module M5–5)	(EP) Calculation procedures
EN 16798-5-1	Energy performance of buildings – Ventilation for buildings – Part 5–1: Calculation methods for energy requirements of ventilation and air conditioning systems (Modules M5–6, M5–8, M6–5, M6–8, M7–5, M7–8) – Method 1: Distribution and generation	(EP) Calculation procedures
EN 16798-5-2	Energy performance of buildings – Ventilation for buildings – Part 5–2: Calculation methods for energy requirements of ventilation systems (Modules M5-6, M5-8, M6-5, M6-8, M7-5, M7-8) - Method 2: Distribution and generation	(EP) Calculation procedures
M6, EPB - Humidification Systems, ……		
See M3, Heating		
M7, EPB - Dehumidification Systems, ……		
See M4, Cooling		
M8, EPB - Domestic Hot Water Systems, ……		
EN 12831-3	Energy performance of buildings – Method for calculation of the design heat load – Domestic hot water systems heat load and characterization of needs, Module M8–2, M8–3	Building, system or component design procedures
See also M3, Heating		
M9, EPB - Lighting and Lighting Systems, ……		
EN 15193-1	Energy performance of buildings – Energy requirements for lighting – Part 1: Specifications, Module M9	(EP) Calculation procedures
M10, EPB - Building Automation and Control, ……		
EN 15232-1	Energy performance of buildings – Part 1: Impact of Building Automation, Controls and Building Management – Modules M10–4,5,6,7,8,9,10	Building, system or component design procedures
EN ISO 52120-1	Energy performance of buildings – Contribution of Building Automation and Controls and	Building, system or component design

	Building Management – Part 1: Modules M10-4,5,6,7,8,9,10 (in preparation)	procedures
EN 16946-1	Energy Performance of Buildings – Inspection of Automation, Controls and Technical Building Management – Part 1: Module M10–11	Inspection procedures
EN 16947-1	Energy Performance of Buildings – Building Management System – Part 1: Module M10–12	Building, system or component design procedures
EN ISO 52127-1	Energy performance of buildings - Building Automation, Controls and Building Management - Part 1: Building Management System - Module M10-12 (in preparation)	Building, system or component design procedures
EN 15500-1	Energy Performance of Buildings - Control for heating, ventilating and air conditioning applications - Part 1: Electronic individual zone control equipment - Modules M3-5, M4-5, M5-5	Building, system or component design procedures
EN 12098-1	Energy Performance of Buildings - Controls for heating systems - Part 1: Control equipment for hot water heating systems - Modules M3-5, 6, 7, 8	Building, system or component design procedures
EN 12098-3	Energy Performance of Buildings - Controls for heating systems - Part 3: Control equipment for electrical heating systems - Modules M3-5,6,7,8	Building, system or component design procedures
EN 12098-5	Energy Performance of Buildings - Controls for heating systems - Part 5: Start-stop schedulers for heating systems - Modules M3-5,6,7,8	Building, system or component design procedures
M11, EPB - PV and wind power, ……		
EN 15316–4-10	Energy performance of buildings - Method for calculation of system energy requirements and system efficiencies - Part 4-10: Wind power generation systems, Module M11-8-7	(EP) Calculation procedures
M12, EPB - Transport, ……		
--		
M13, EPB - Appliances and other equipment, ……		
--		

U-CERT

User-Centred Energy Performance Assessment and Certification

OUR TEAM

This project has received funding from the European Union's Horizon 2020 research and innovation programme under the grant agreement number 839937. The European Union is not liable for any use that may be made of the information contained in this document, which is merely representing the authors' view.